Service
Service
Service

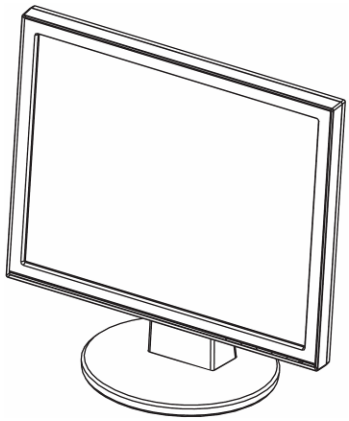

Service Manual

Horizontal Frequency
30-82 KHz

TABLE OF CONTENTS

Description	Page	Description	Page
Table Of Contents	1	6.Schematic	20
Revision List	2	6.1.Main Board	20
Important Safety Notice	3	6.2.Power Board	24
1.Monitor Specification	4	6.3.Audio Board	26
2.LCD Monitor Description	5	7.PCB Layout	27
3.Operation Instruction	6	7.1.Main Board	27
3.1.General Instructions	6	7.2.Power Board	30
3.2.Control Button	6	7.3.Audio Board	32
3.3.OSD Menu	7	7.4.Key Board	33
4.Input/Output Specification	11	8.Maintainability	34
4.1.Input Signal Connector	11	8.1.Equipments and Tools Requirement	34
4.2.Power Supply Requirements	12	8.2.Trouble Shooting	35
4.3.Factory Preset Display Modes	13	9.White-Balance, Luminance adjustment	41
4.4.Panel Specification	14	10.Monitor Exploded View	43
5.Block Diagram	16	11.BOM List	44
5.1.Software Flow Chart	16	12.Different Parts List	64
5.2.Electrical Block Diagram	18		

http://www.wiel.net

SAFETY NOTICE

ANY PERSON ATTEMPTING TO SERVICE THIS CHASSIS MUST FAMILIARIZE HIMSELF WITH THE CHASSIS AND BE AWARE OF THE NECESSARY SAFETY PRECAUTIONS TO BE USED WHEN SERVICING ELECTRONIC EQUIPMENT CONTAINING HIGH VOLTAGES.

CAUTION: USE A SEPARATE ISOLATION TRANSFOMER FOR THIS UNIT WHEN SERVICING

Revision List

Version	Release Date	Revision History	TPV Model Name
A00	Oct.11, 2007	Initial release	T97MMANCPWUSDN
			T97MMANDPWUSDZ
A01	Jun.26, 2008	Add new BOM	T97MMANBPWU1D

http://www.wjel.net

Important Safety Notice

Proper service and repair is important to the safe, reliable operation of all AOC Company Equipment. The service procedures recommended by AOC and described in this service manual are effective methods of performing service operations. Some of these service operations require the use of tools specially designed for the purpose. The special tools should be used when and as recommended.

It is important to note that this manual contains various CAUTIONS and NOTICES which should be carefully read in order to minimize the risk of personal injury to service personnel. The possibility exists that improper service methods may damage the equipment. It is also important to understand that these CAUTIONS and NOTICES ARE NOT EXHAUSTIVE. AOC could not possibly know, evaluate and advise the service trade of all conceivable ways in which service might be done or of the possible hazardous consequences of each way. Consequently, AOC has not undertaken any such broad evaluation. Accordingly, a servicer who uses a service procedure or tool which is not recommended by AOC must first satisfy himself thoroughly that neither his safety nor the safe operation of the equipment will be jeopardized by the service method selected.
Hereafter throughout this manual, AOC Company will be referred to as AOC.

WARNING

Use of substitute replacement parts, which do not have the same, specified safety characteristics may create shock, fire, or other hazards.

Under no circumstances should the original design be modified or altered without written permission from AOC. AOC assumes no liability, express or implied, arising out of any unauthorized modification of design.
Servicer assumes all liability.

FOR PRODUCTS CONTAINING LASER:
DANGER-Invisible laser radiation when open AVOID DIRECT EXPOSURE TO BEAM.
CAUTION-Use of controls or adjustments or performance of procedures other than those specified herein may result in hazardous radiation exposure.
CAUTION -The use of optical instruments with this product will increase eye hazard.

TO ENSURE THE CONTINUED RELIABILITY OF THIS PRODUCT, USE ONLY ORIGINAL MANUFACTURER'S REPLACEMENT PARTS, WHICH ARE LISTED WITH THEIR PART NUMBERS IN THE PARTS LIST SECTION OF THIS SERVICE MANUAL.
Take care during handling the LCD module with backlight unit
-Must mount the module using mounting holes arranged in four corners.
-Do not press on the panel, edge of the frame strongly or electric shock as this will result in damage to the screen.
-Do not scratch or press on the panel with any sharp objects, such as pencil or pen as this may result in damage to the panel.
-Protect the module from the ESD as it may damage the electronic circuit (C-MOS).
-Make certain that treatment person’s body is grounded through wristband.
-Do not leave the module in high temperature and in areas of high humidity for a long time.
-Avoid contact with water as it may a short circuit within the module.
-If the surface of panel becomes dirty, please wipe it off with a soft material. (Cleaning with a dirty or rough cloth may damage the panel.)

http://www.wjel.net

1. Monitor Specifications

Model	VW198T/S/D
Panel Size	19"Wide
Max. Resolution	WSXGA+ 1680x1050
Brightness (Typ.)	300
Contrast Ratio (Typ.)	1000:1
Viewing Angle (H/V), CR≧10	160/160
Display Colors	16.7M/16.2M(VW198D only)
Response Time	5ms (Tr+Tf)
Analog input	Yes
Digital input	DVI(VW198T only)
Speaker(Built-in)	1W x 2 (VW198T and VW198S only)
Tilt	+20° ~ -5°
VESA wall mount	100 x 100mm
Physical Dimension (WxHxD)	444x364x210mm
Box Dimension (WxHxD)	513x425x155mm
Net Weight (Esti.)	4.3kg
Gross Weight (Esti.)	5.8kg
Voltage rating	AC: 100~240V (Built-in)

http://www.wiel.net

2. LCD Monitor Description

The LCD monitor will contain a main board, an audio board, a power board and a key board which house the flat panel control logic, brightness control logic and DDC.

The power board will provide AC to DC Inverter voltage to drive the backlight of panel and the main board chips each voltage.

Monitor Block Diagram

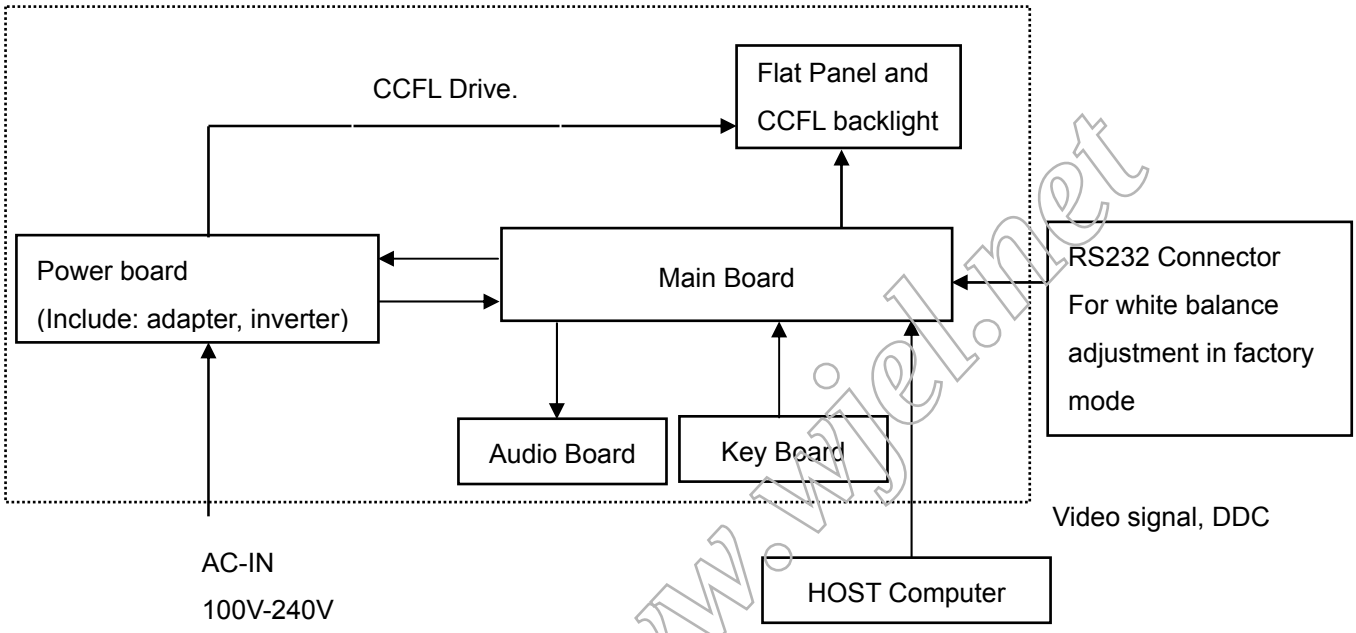

http://www.vjel.net

3. Operating Instructions

3.1 General Instructions

Press the power button to turn the monitor on or off. The other control buttons are located at the front of the panel of the monitor.

By changing these settings, the picture can be adjusted to your personal preferences.

- The power cord should be connected.
- Connect the video cable from the monitor to the video card.
- Press the power button to turn on the monitor, the power indicator will light up.

3.2 Control Buttons

3.2.1 Key Control

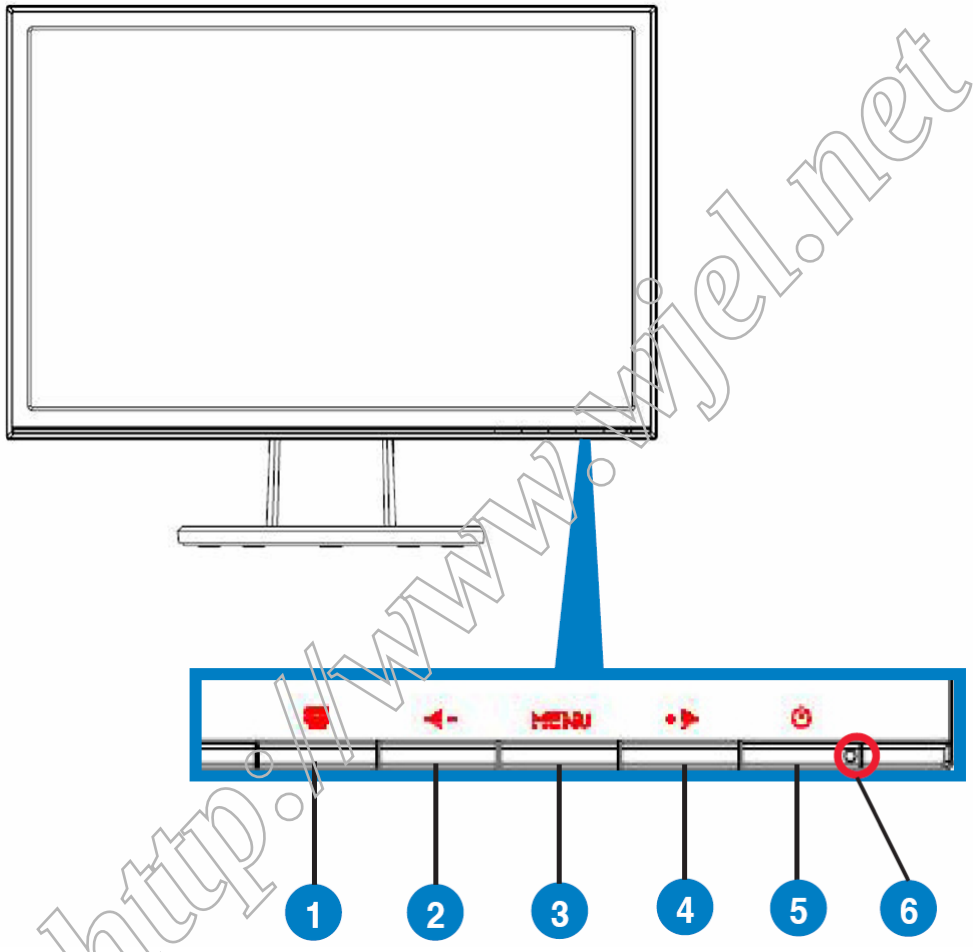

http://www.vjel.net

3.2.2 Key Function

1. S button:
   - Automatically adjust the image to its optimized position, clock, and phase by long pressing this button for 2-4 seconds (for VGA mode only).
   - Use this hotkey to switch from five video preset modes (Game Mode, Night View Mode, Scenery Mode, Standard Mode, Theater Mode) with SPLENDID™ Video Enhancement Technology.
   - Exit the OSD menu or go back to the previous menu as the OSD menu is active.

2. – Button:
   - Press this button to decrease the value of the function selected or move to the previous fuction.
   - This is also a hotkey for Volume adjustment.

3. MENU Button:
   - Press this button to enter/select the icon (function) highlighted while the OSD menu is activated.

4. + Button:
   - Press this button to increase the value of the function selected or move to the next fuction.
   - This is also a hotkey for Brightness adjustment.

3.3 OSD Menu

3.3.1 How to Reconfigure

1. Press the MENU button to activate the OSD menu.

http://www.wjel.net

2. Press - and + to navigate through the functions. Highlight and activate the desired function by pressing the MENU button. If the function selected has a sub-menu, press + and - again to navigate through the sub-menu functions. Highlight and activate the desired sub-menu function by pressing the MENU button.
3. Press - and + to change the settings of the selected function.
4. To exit the OSD menu, press the S button. Repeat step 2 and step 3 to adjust any other function.

3.3.2 OSD Function Introduction

1. Spendid

This function contains five sub-functions you can select for your preference. Each mode has the Reset selection, allowing you to maintain your setting or return to the preset mode.

http://www.wjel.net

2. Image

You can adjust brightness, contrast, sharpness, saturation,position (VGA only), and focus (VGA only) from this main function.

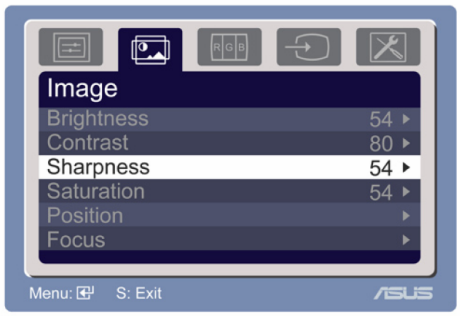

- Brightness: the adjusting range is from 0 to 100. + is a hotkey to activate this function.
- Contrast: the adjusting range is from 0 to 100.
- Sharpness: the adjusting range is from 0 to 100.
- Saturation: the adjusting range is from 0 to 100.
- Position: adjusts the horizontal postition (H-Position) and the vertical position (V-Position) of the image. The adjusting range is from 0 to 100.
- Focus: reduces Horizonal-line noise and Vertical-line noise of the image by adjusting (Phase) and (Clock) separately. The adjusting range is from 0 to 100.

- Phase adjusts the phase of the pixel clock signal. With a wrong phase adjustment, the screen shows horizontal disturbances.
- Clock (pixel frequency) controls the number of pixels scanned by one horizontal sweep. If the frequency is not correct, the screen shows vertical stripes and the image is not proportional.

3. Color

Select the image color you like from this function.

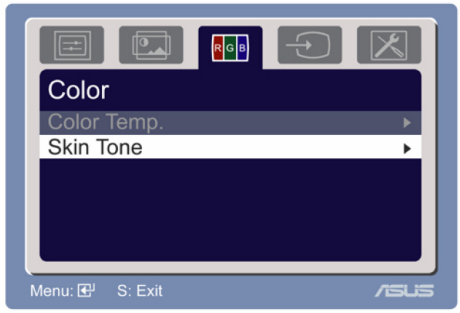

- Color Temp.: contains five color modes including Cool, Normal, Warm, sRGB, and User mode.
- Skin Tone: contains three color modes including Reddish, Natural, and Yellowish.

In the User mode, colors of R (Red), G (Green), and B (Bluee) are user-configurable; the adjusting range is from 0-100.

http://www.vie.net

4. Input Select

In this function, you can select either VGA or DVI input source. (Only for some models)

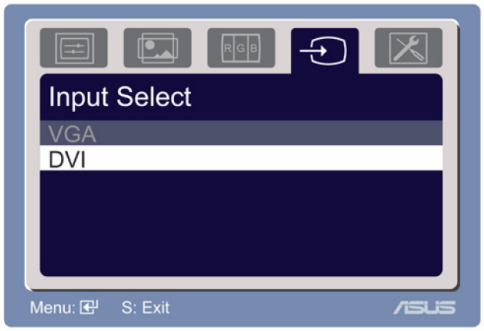

5. System Setup

Allow you to adjust the system.

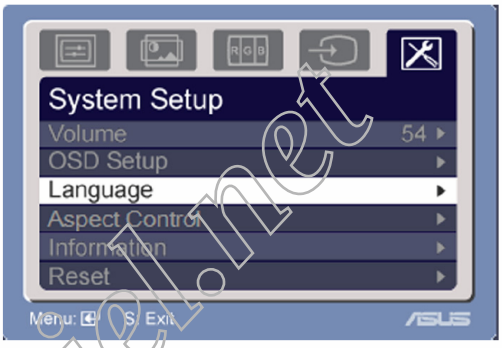

- Volume: the adjusting range is from 0 to 100. is a hotkey to activate this function.
- OSD Setup: adjusts the horizontal postition (H-Position) and the vertical position (V-Position) of the OSD. The adjusting range is from 0 to 100. In the OSD Timeout selection, you can adjust the OSD timeout from 10 to 120.
- Language: there are ten languages for your selection, including English, German, Italian, French, Dutch, Spanish, Russian, Traditional Chinese, Simplified Chinese, Japanese, and Korean.
- Aspect Controls: adjusts the aspect ratio to “Full” or “4:3”.
- Information: shows the monitor information.
- Reset: “Yes” allows you to revert to the preset mode.

http://www.vgl.net

4. Input/Output Specification

4.1 Input Signal Connector

Analog connectors

Pin No.	Description	Pin No.	Description
1.	Red Video	9.	+5V
2.	Green Video	10.	Logic Ground
3.	Blue Video	11.	Monitor Ground
4.	Monitor Ground	12.	DDC-Serial Data
5.	DDC-Return	13.	H-Sync
6.	Red Ground	14.	V-Sync
7.	Green Ground	15.	DDC-Serial Clock
8.	Blue Ground		
VGA connector layout			
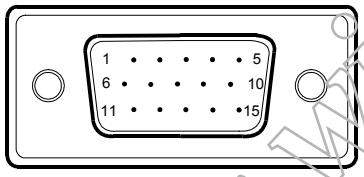			

DVI connectors

Pin No.	Description	Pin No.	Description	Pin No.	Description
1.	RX2-	9.	R X1-	17.	RX0-
2.	RX2+	10.	RX1+	18.	RX0+
3.	RX2 Shield	11.	RX1 Shield	19.	RX0 Shield
4.	NC	12.	NC	20.	NC
5.	NC	13.	NC	21.	NC
6.	DDC Clock	14.	+5V Power	22.	RX Clock Shield
7.	DDC Data	15.	Ground	23.	RX Clock+
8.	NC	16.	Hot Plug Detection	24.	RX Clock-
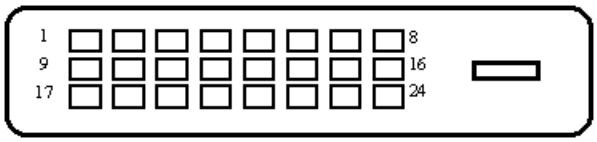					

http://www.wjel.net

4.2 Power Supply Requirements

A/C Line voltage range	100 V ~ 240 V
A/C Line frequency range	50 ± 3Hz, 60 ± 3Hz
Input Voltage transients	90-264 voltage AC for 10 sec @40℃
Current	1.5A max at 100V; 0.8A max at 240 V
Peak surge current	< 60A peak at 240 VAC and cold starting < 30A peak at 120VAC and cold starting
Leakage current	< 3.5mA
Power line surge	No advance effects (no loss of information or defect) with a maximum of 1 half-wave missing per second

http://www.wjel.net

4.3 Factory Preset Display Modes

Mode	Resolution Frequency	Horizontal Frequency	Vertical Frequency	Pixel
VGA	640 x 480	31,469KHz	60Hz	25,175MHz
	640 x 480	37,861KHz	72Hz	31,50MHz
	640 x 480	37,50KHz	75Hz	31,50MHz
SVGA	800 x 600	35,156KHz	56Hz	36,00MHz
	800 x 600	37,879KHz	60Hz	40,00MHz
	800 x 600	48,077KHz	72Hz	50,00MHz
	800 x 600	46,875KHz	75Hz	49,50MHz
XGA	1024 x 768	48,363KHz	60Hz	65,00MHz
	1024 x 768	56,476KHz	70Hz	75,00MHz
	1024 x 768	57,70KHz	72Hz	78,40MHz
	1024 x 768	60,023KHz	75Hz	78,75MHz
Mac	1152 x 864	67,5KHz	75Hz	108,00MHz
	1280 x 960	60KHz	60Hz	108,00MHz
WXGA	1280 x 800	49,702KHz	60Hz	83.5MHz
	1280 x 800	62,795KHz	75Hz	106.5MHz
SXGA	1280 x 1024	63,981KHz	60Hz	108,00MHz
	1280 x 1024	74,4KHz	70Hz	124,9MHz
	1280 x 1024	77,9KHz	72Hz	134,6MHz
	1280 x 1024	79,976KHz	75Hz	135,00MHz
WXGA+	1440 x 900	55,935KHz	60Hz	106,5MHz
	1440 x 900	70,635KHz	75Hz	136,75MHz
WSXGA	1680 x 1050	65,29KHZ	60Hz	146.25MHZ

Modos IBM

Modo	Resolution Frequency	Horizontal Frequency	Vertical Frequency	Pixel
DOS	640 x 350	31,469KHz	70Hz	25,175MHz
	720 x 400	31,469KHz	70Hz	28,322MHz

Modos MAC

Modo	Frecuencia de Resolución	Frecuencia Horizontal	Frecuencia Vertical	Píxel
VGA	640 x 480	35KHz	67Hz	30,24MHz
SVGA	832 x 624	49,725KHz	75Hz	57,2832MHz

http://www.wjel.net

4.4 Panel Specification

4.4.1 General Features

M190Z1-L01 is a 19” wide TFT Liquid Crystal Display module with 4 CCFL Backlight unit and 30 pins 2ch-LVDS interface. This module supports 1680 x 1050 WSXGA+ mode and can display 16.7M colors. The inverter module for Backlight is not built in.

- Super Wide viewing angle.
- Super High contrast ratio
- Super fast response time
- High color saturation
- WSXGA+ (1680 x 1050 pixels) resolution
- DE (Data Enable) only mode
- LVDS (Low Voltage Differential Signaling) interface
- RoHS Compliance

4.4.2 Display Characteristics

Item	Specification	Unit
Diagonal Size	481.4 (18.95” diagonal)	mm
Active Area	408.24 (H) x 255.15 (V)	mm
Bezel Opening Area	412.24 (H) x 259.15 (V)	mm
Driver Element	a-si TFT active matrix	-
Pixel Number	1680 x R.G.B. x 1050	pixel
Pixel Pitch	0.243 (H) x 0.243 (V)	mm
Pixel Arrangement	RGB vertical stripe	-
Display Colors	16.7M	color
Transmissive Mode	Normally White	-
Color saturation	72%NTSC (typ.)	-
Surface Treatment	Hard coating (3H), Anti-glare (Haze 25)	-

http://www.xxx.net

4.4.3 Optical Characteristics

Item		Symbol	Condition	Min.	Typ.	Max.	Unit
Color Chromaticity	Red	Rx	θ_x=0°, θ_Y =0° CS-1000T	Typ – 0.03	0.647	Typ + 0.03	
		Ry			0.334		
	Green	Gx			0.284		
		Gy			0.607		
	Blue	Bx			0.151		
		By			0.071		
	White	Wx			0.313		
		Wy			0.329		
Center Luminance of White		L_C		230	300	---	cd/m^2
Contrast Ratio		CR		630	1000	---	-
Response Time		T_R	θ_x=0°, θ_Y =0°	---	1.5	6.5	ms
		T_F		---	3.5	8.5	ms
White Variation		δW	θ_x=0°, θ_Y =0°	---	1.3	1.5	-
Viewing Angle	Horizontal	θ_x+	CR ≧ 10	75	85	---	Deg.
		θ_x-		75	85	---	
	Vertical	θ_Y+		70	80	---	
		θ_Y-		70	80	---	

4.4.4 Electrical Characteristics

(1) TFT-LCD

Parameter		Symbol	Value			Unit
			Min.	Typ.	Max.	
Power Supply Voltage		Vcc	4.5	5.0	5.5	V
Ripple Voltage		V_{RP}	-	-	100	mV
Rush Current		I_{RUSH}	-	-	3	A
Power Supply Current	White	Icc	-	-	0.728	A
	Black		-	-	1.078	A
	Vertical Stripe		-	-	1.078	A
LVDS differential input voltage		Vid	100	-	600	mV
LVDS common input voltage		Vic	-	1.2	-	V

(2) Backlight

Parameter	Symbol	Value			Unit
		Min.	Typ.	Max.	
Lamp Input Voltage	V_L	---	775	853	V_{RMS}
Lamp Current	I_L	2.0	7.0	7.5	mA_{RMS}
Lamp Turn On Voltage	V_S	---	---	1500(25℃)	V_{RMS}
		---	---	1710(0℃)	V_{RMS}
Operating Frequency	F_L	40	---	80	KHz
Lamp Life Time	L_{BL}	40000	---	---	Hrs
Power Consumption	P_L	---	21.7	---	W

http://www.wel.net

5. Block Diagram

5.1 Software Flow Chat

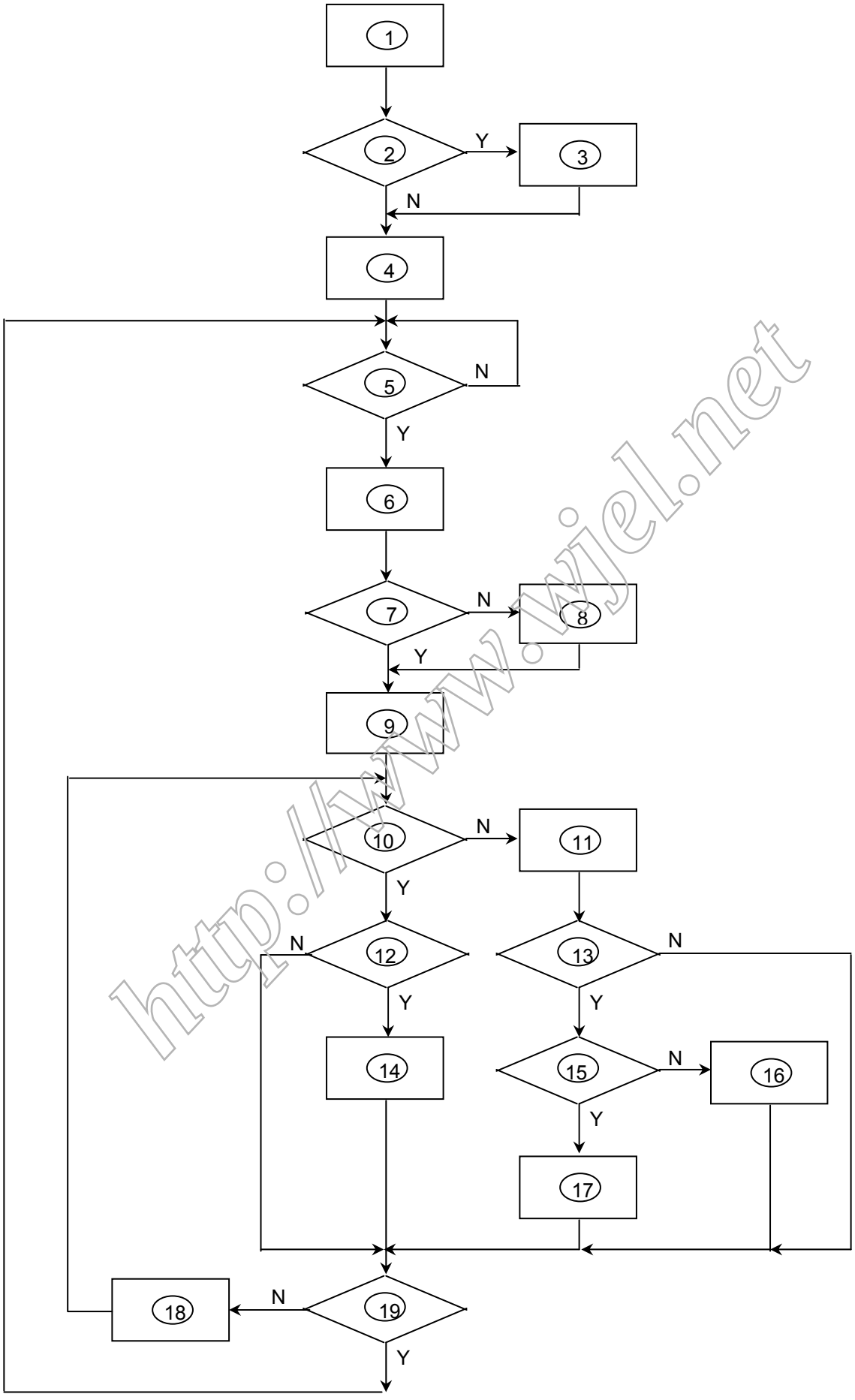

http://www.wiel.net

1) MCU initialize.
2) Is the EPROM blank?
3) Program the EPROM by default values.
4) Get the PWM value of brightness from EPROM.
5) Is the power key pressed?
6) Clear all global flags.
7) Are the AUTO and SELECT keys pressed?
8) Enter factory mode.
9) Save the power key status into EPROM. Turn on the LED and set it to green color. Scalar initializes.
10) In standby mode?
11) Update the lifetime of back light.
12) Check the analog port, are there any signals coming?
13) Does the scalar send out an interrupt request?
14) Wake up the scalar.
15) Are there any signals coming from analog port?
16) Display "No connection Check Signal Cable" message. And go into standby mode after the message disappear.
17) Program the scalar to be able to show the coming mode.
18) Process the OSD display.
19) Read the keyboard. Is the power key pressed?

http://www.wiel.net

5.2 Electrical Block Diagram

5.2.1 Main Board

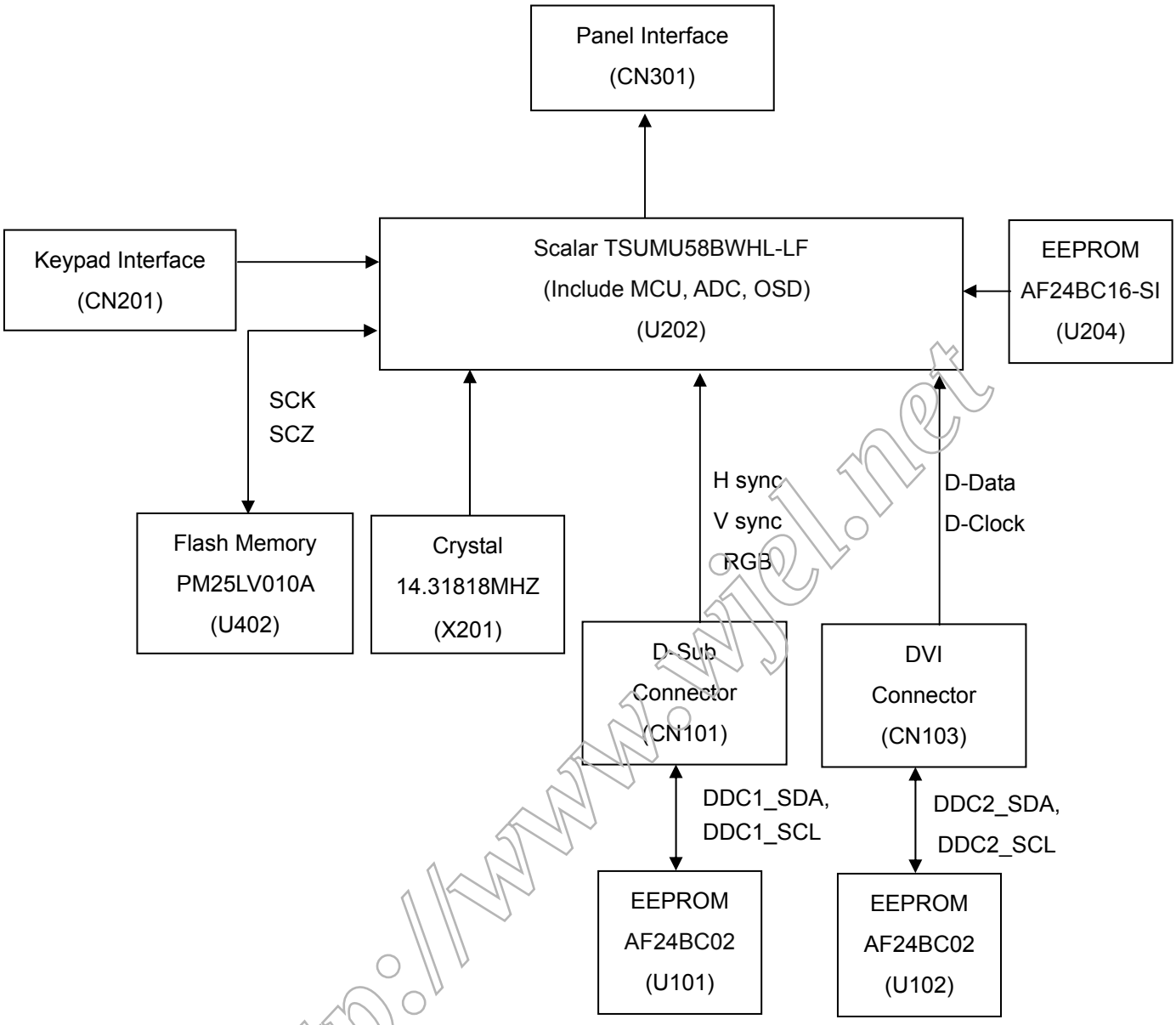

http://www.wiel.net

5.2.2 Inverter/Power Board

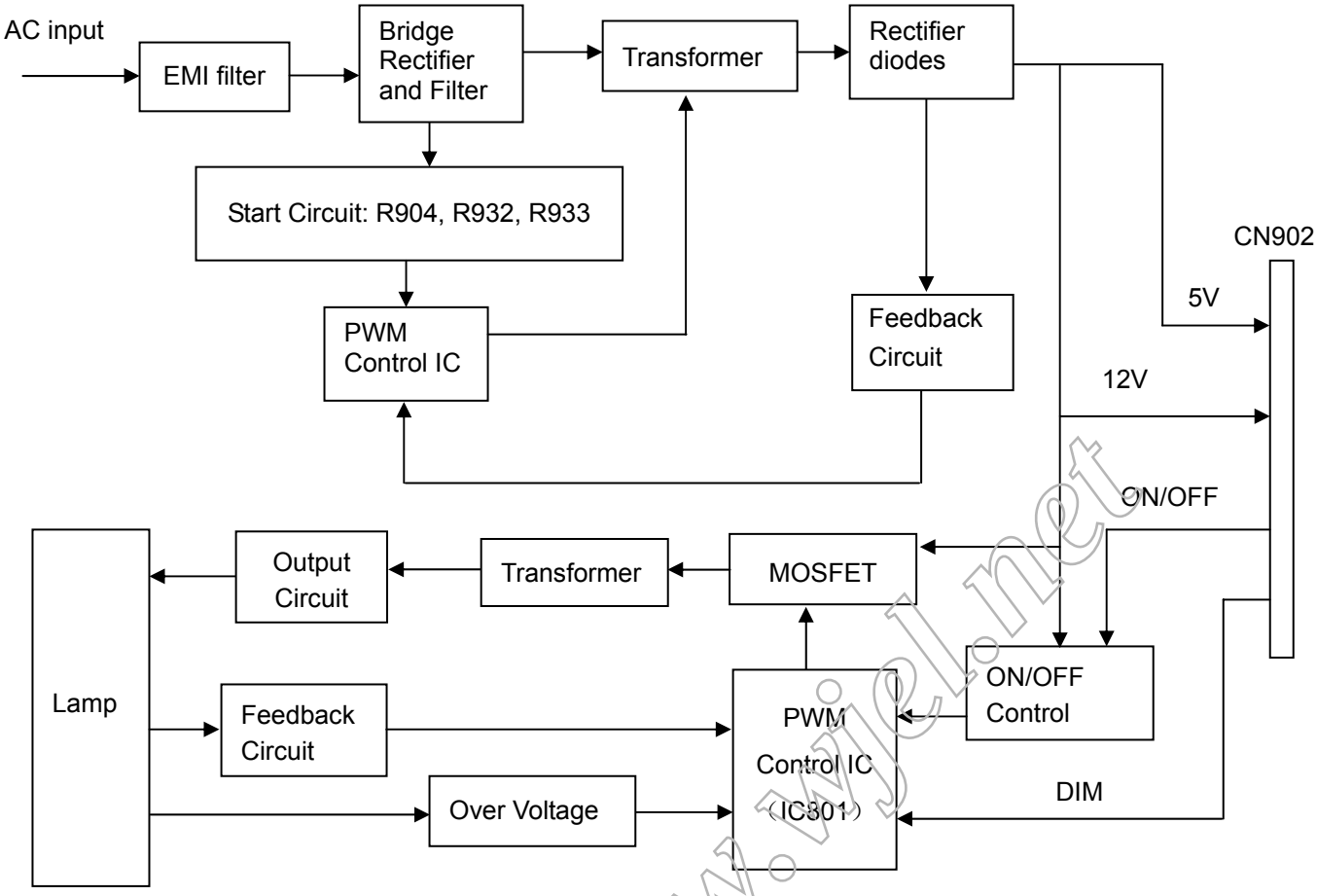

http://www.wjel.net

6. Schematic

6.1 Main Board

715G2698-3

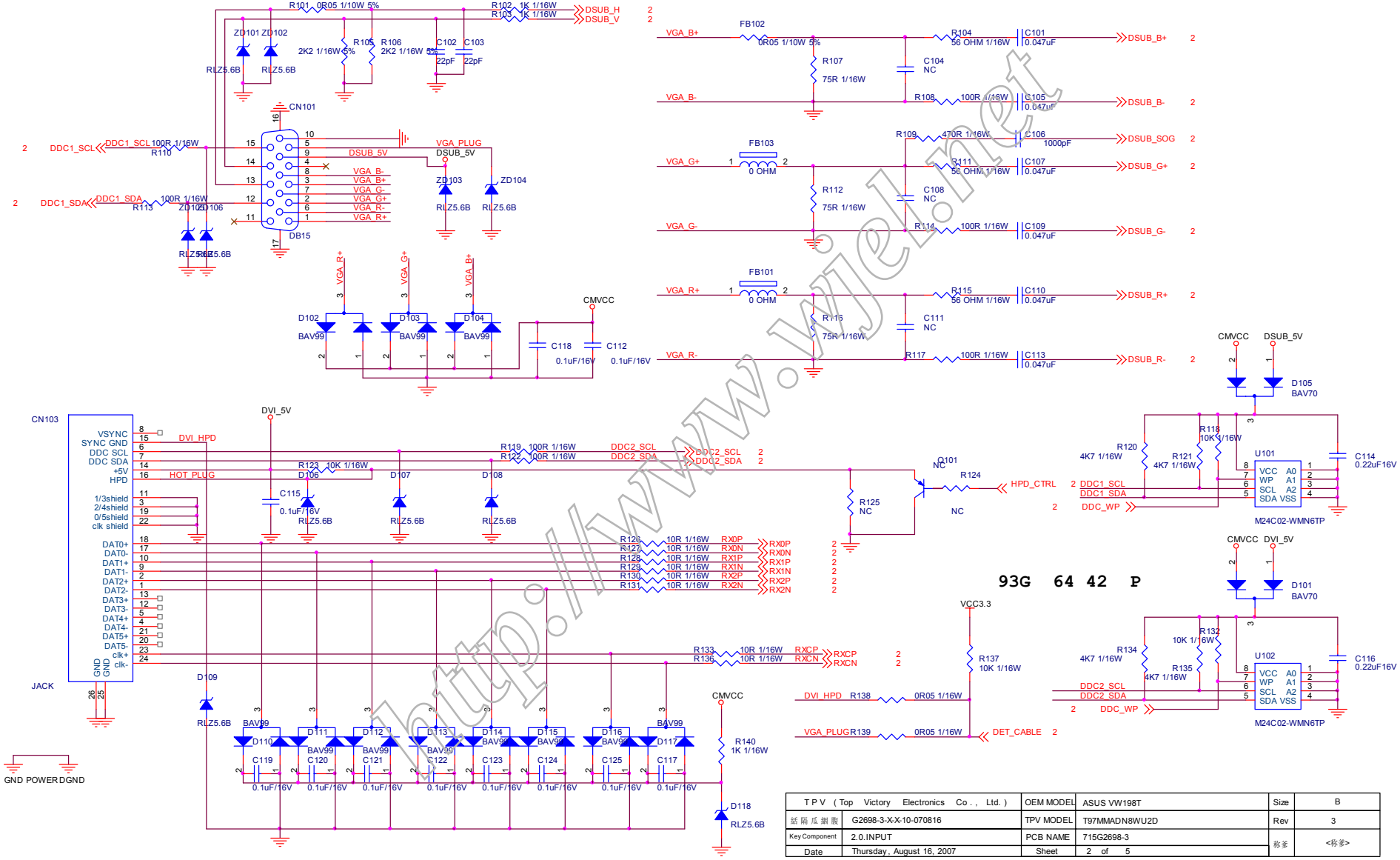

T P V (Top Victory Electronics Co . , Ltd.)		OEM MODEL	ASUS VW198T	Size	B
結 隔 瓜 蝠 膜	G2698-3-X-X-10-070816	TPV MODEL	T97MMADN8WU2D	Rev	3
Key Component	2.0.INPUT	PCB NAME	715G2698-3	称 爹	<称爹>
Date	Thursday, August 16, 2007	Sheet	2 of 5		

http://www.welnet

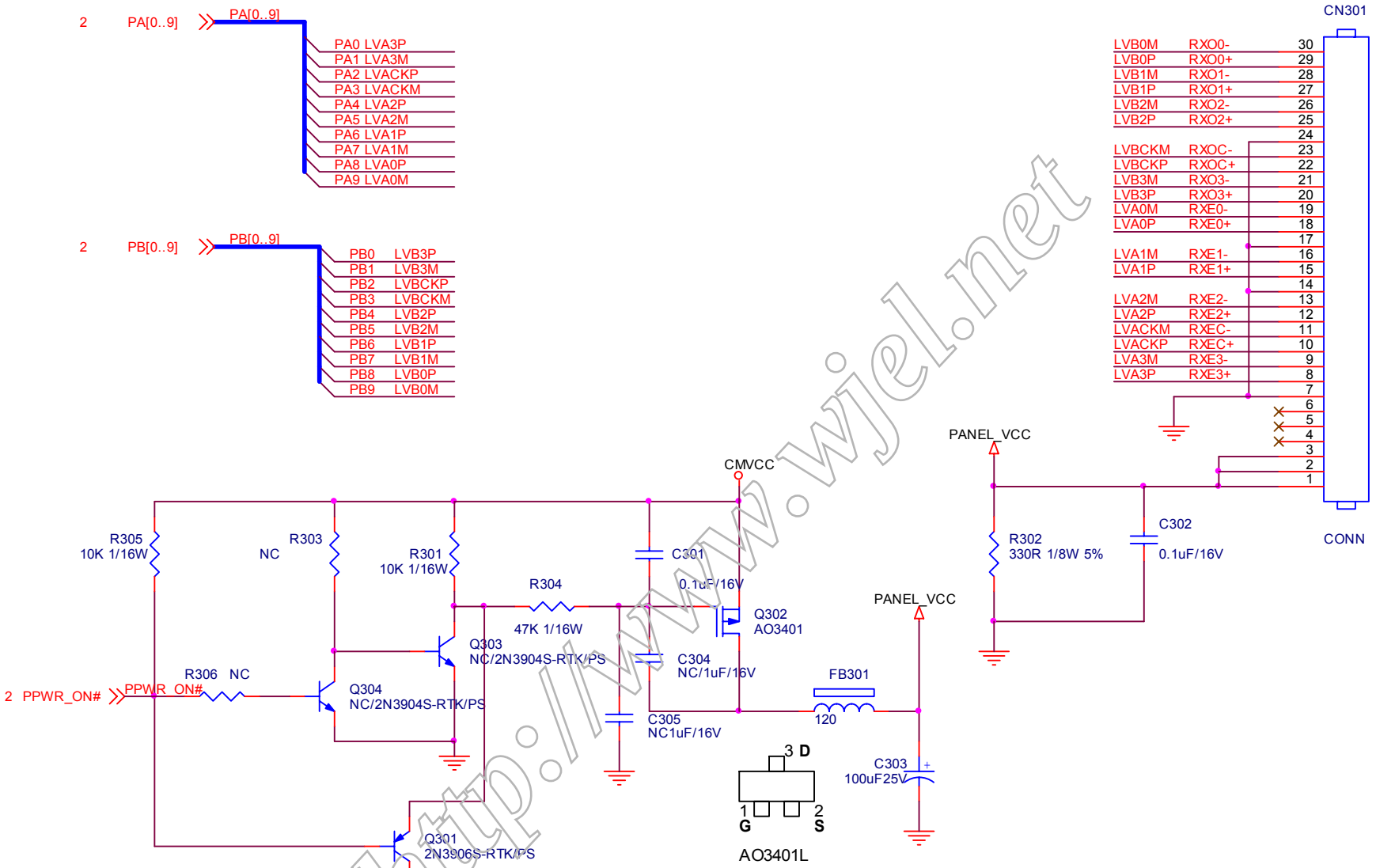

http://www.wjel.net

T P V (Top Victory Electronics Co., Ltd.)		OEM MODEL	ASUS VW198T	Size	A
結 隔 瓜 綢 腹	G2698-3-X-X-10-070816	TPV MODEL	T97MMADN8WU2D	Rev	3
Key Component	3.0.OUTPUT	PCB NAME	715G2698-3	称爹	<称爹>
Date	Thursday, August 16, 2007	Sheet	3 of 5		

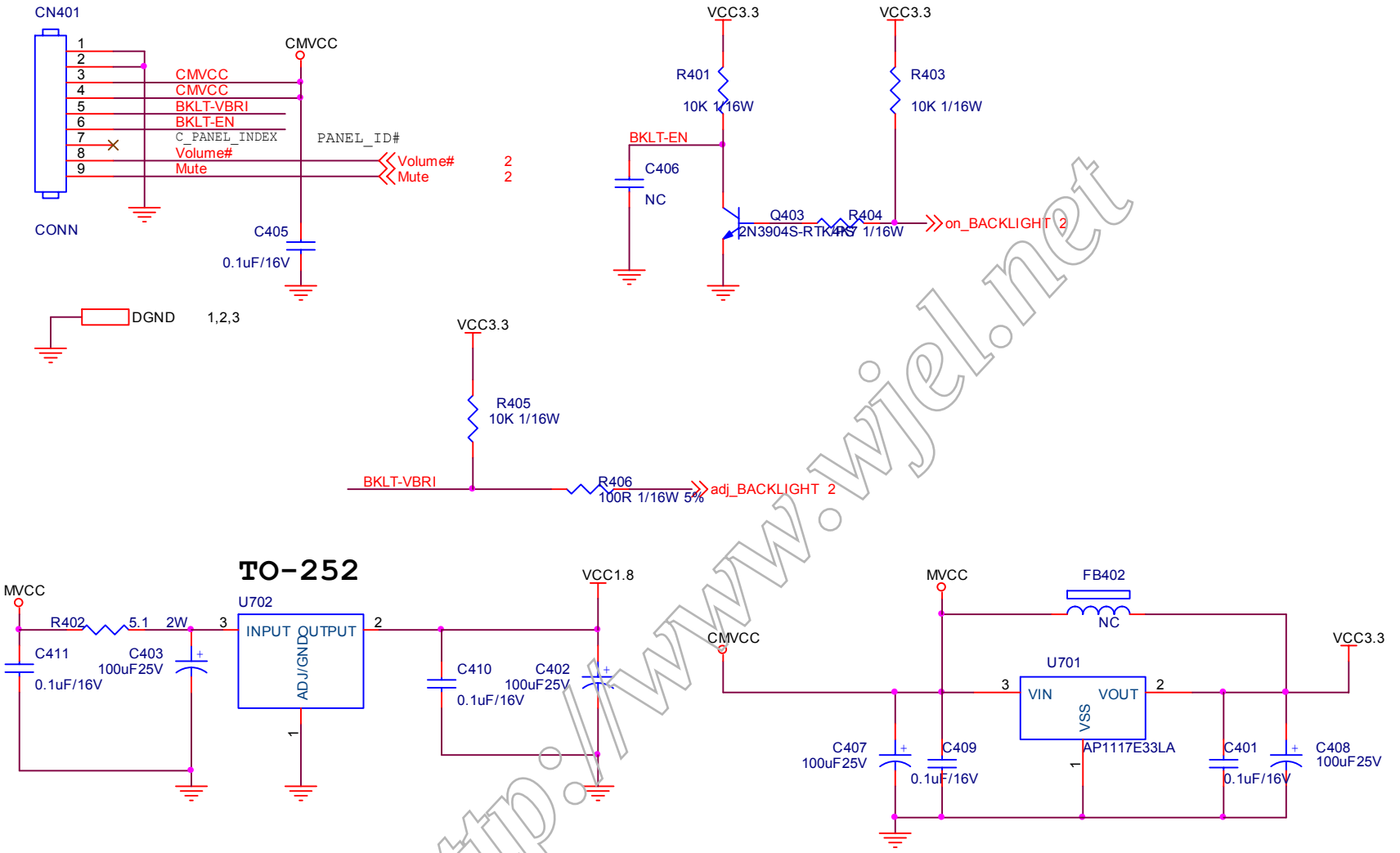

http://www.wjel.net

T P V (Top Victory Electronics Co., Ltd.)		OEM MODEL	ASUS VW198T	Size	A
結 隔 瓜 綑 腹	G2698-3-X-X-10-070816	TPV MODEL	T97MMADN8WU2D	Rev	3
Key Component	4.0.POWER	PCB NAME	715G2698-3	称爹	<称爹>
Date	Thursday, August 16, 2007	Sheet	4 of 5		

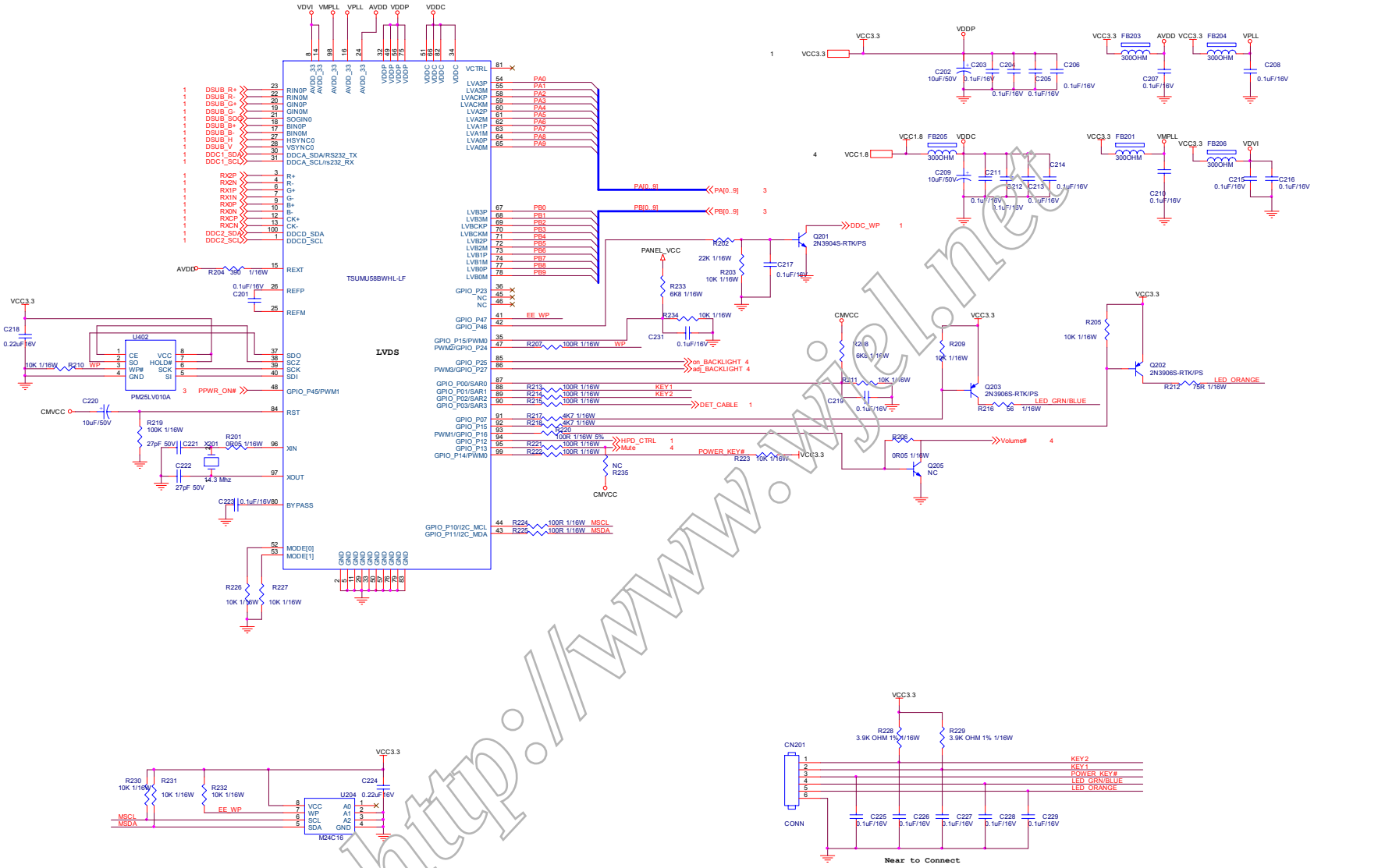

T P V (Top Victory Electronics Co., Ltd.)		OEM MODEL	ASUS VW198T	Size	C
鼠 鼠 瓜 鋼 腹	G2698-3-X-X-10-070816	TPV MODEL	T97MMADN8WU2D	Rev	3
Key Component	5.0.SCALER	PCB NAME	715G2698-3	称参	<称参>
Date	Thursday, August 16, 2007	Sheet	5 of 5		

http://www.wjel.net

6.2 Power Board

715G2538-3

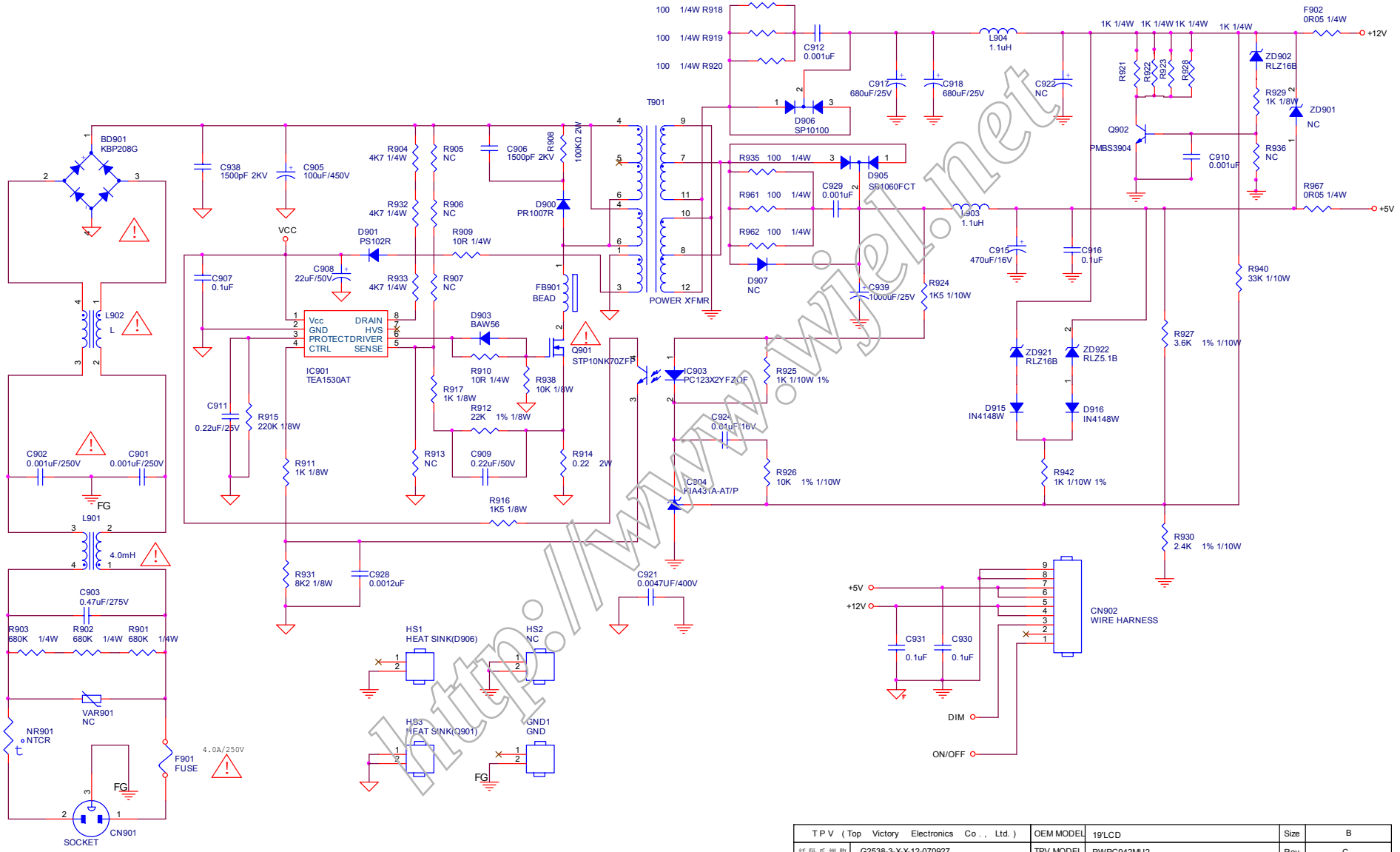

T P V （Top Victory Electronics Co . , Ltd. ）		OEM MODEL	19'LCD	Size	B
話 鬲 瓜 鋼 腹	G2538-3-X-X-12-070927	TPV MODEL	PWPC942MU2	Rev	C
Key Component	02.POWER	PCB NAME	715G2538 3	称 爹	<称爹>
Date	Thursday, September 27, 2007	Sheet	2 of 3		

http://www.wel.net

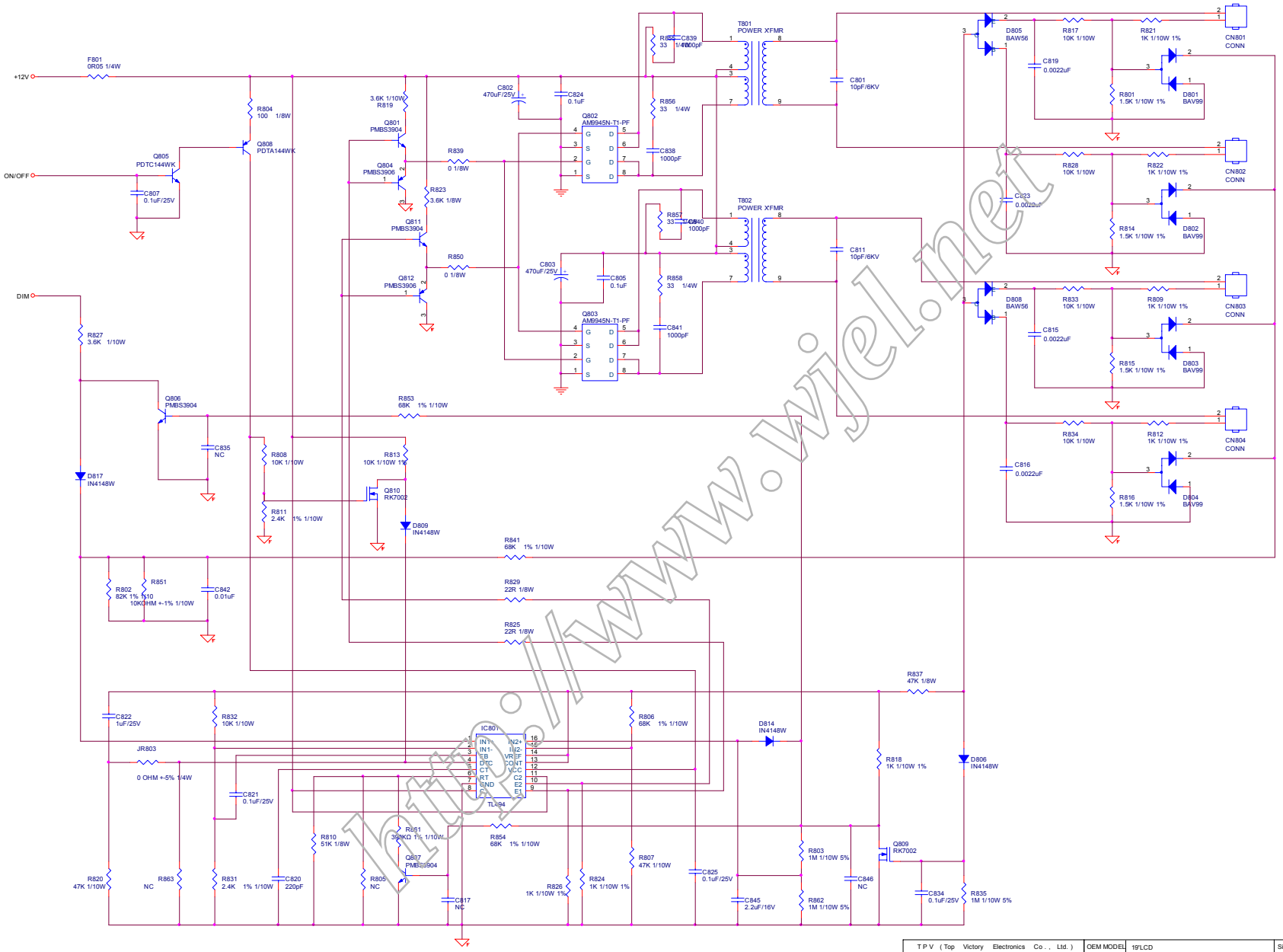

T P V (Top Victory Electronics Co . , Ltd.)		OEM MODEL	19'LCD	Size	Custom
話 隔 瓜 鋼 腹	G2538-3-X-X-12-070927	TPV MODEL	PWPC942MU2	Rev	1
Key Component	03.INVERTER	PCB NAME	715G2538 3	称爹	<称爹>
Date	Thursday, September 27, 2007	Sheet	3 of 3		

http://www.wjel.net

6.3 Audio Board

715G2767-1

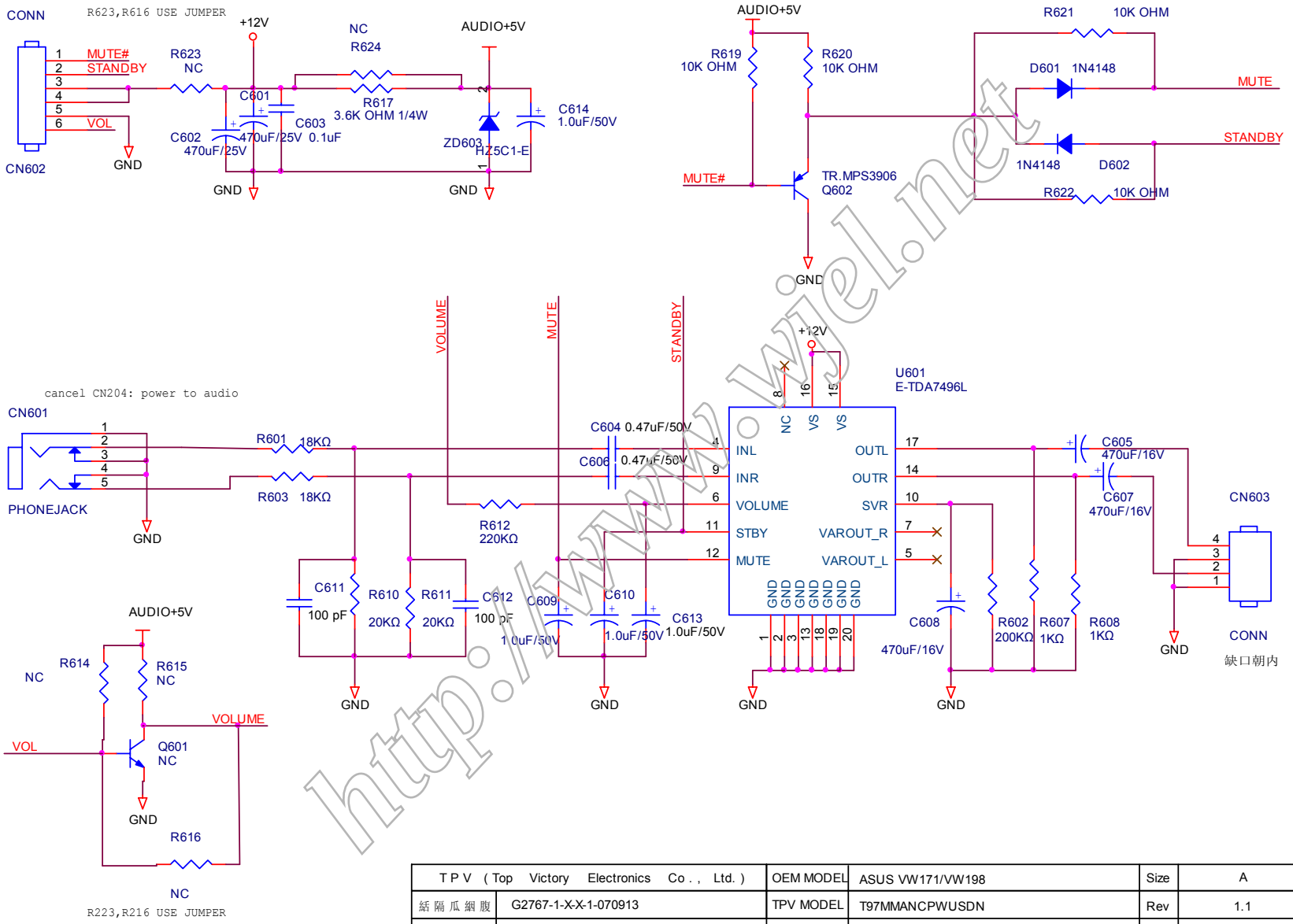

T P V (Top Victory Electronics Co . , Ltd.)		OEM MODEL	ASUS VW171/VW198	Size	A
結 隔 瓜 綢 腹	G2767-1-X-X-1-070913	TPV MODEL	T97MMANCPWUSDN	Rev	1.1
Key Component	02.AUDIO BOARD	PCB NAME	715G2767-1	称爹	<称爹>
Date	Thursday, September 13, 2007	Sheet	2 of 2		

http://www.wel.net

7. PCB Layout

7.1 Main Board

715G2698-3

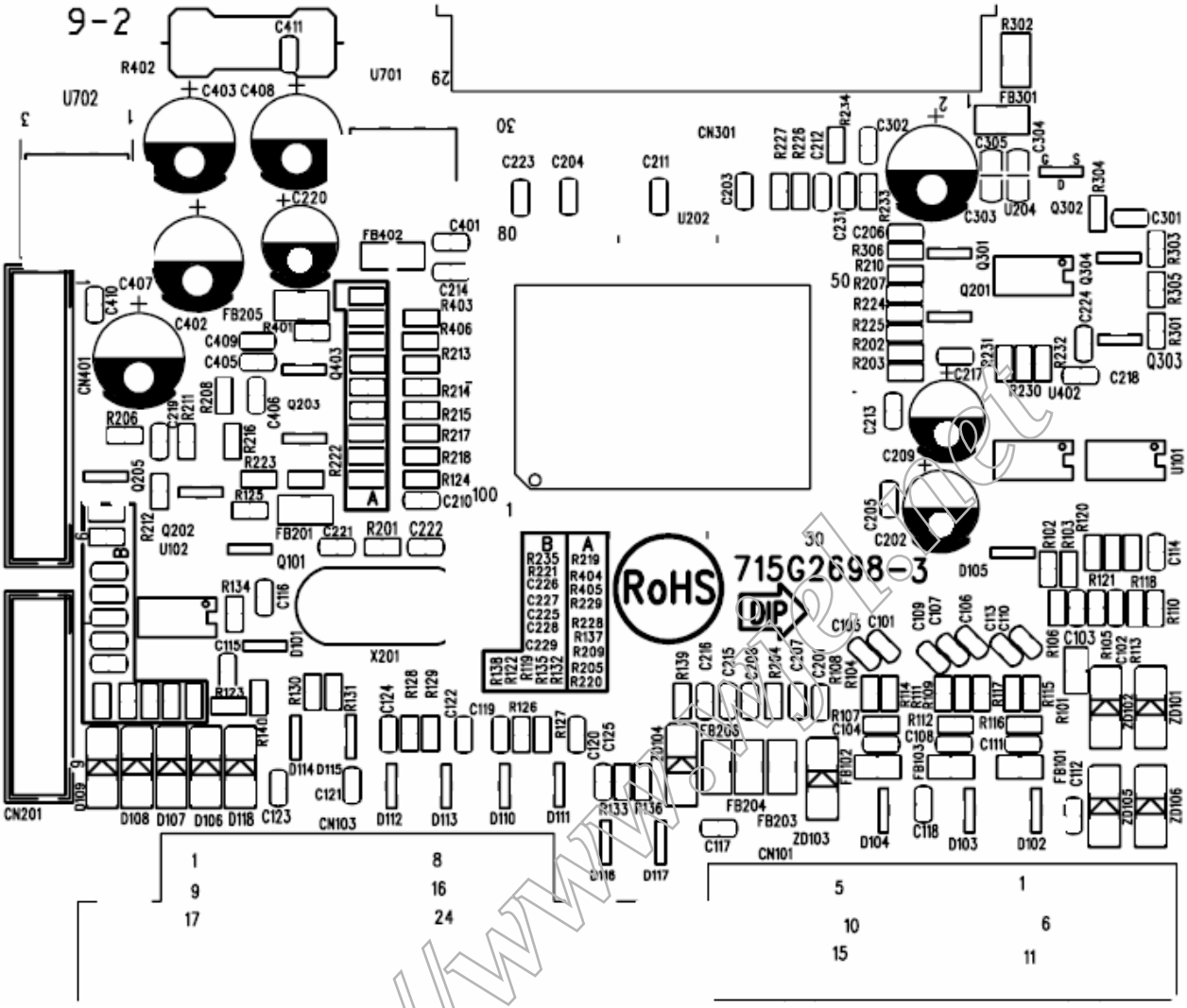

http://www.mytel.tw

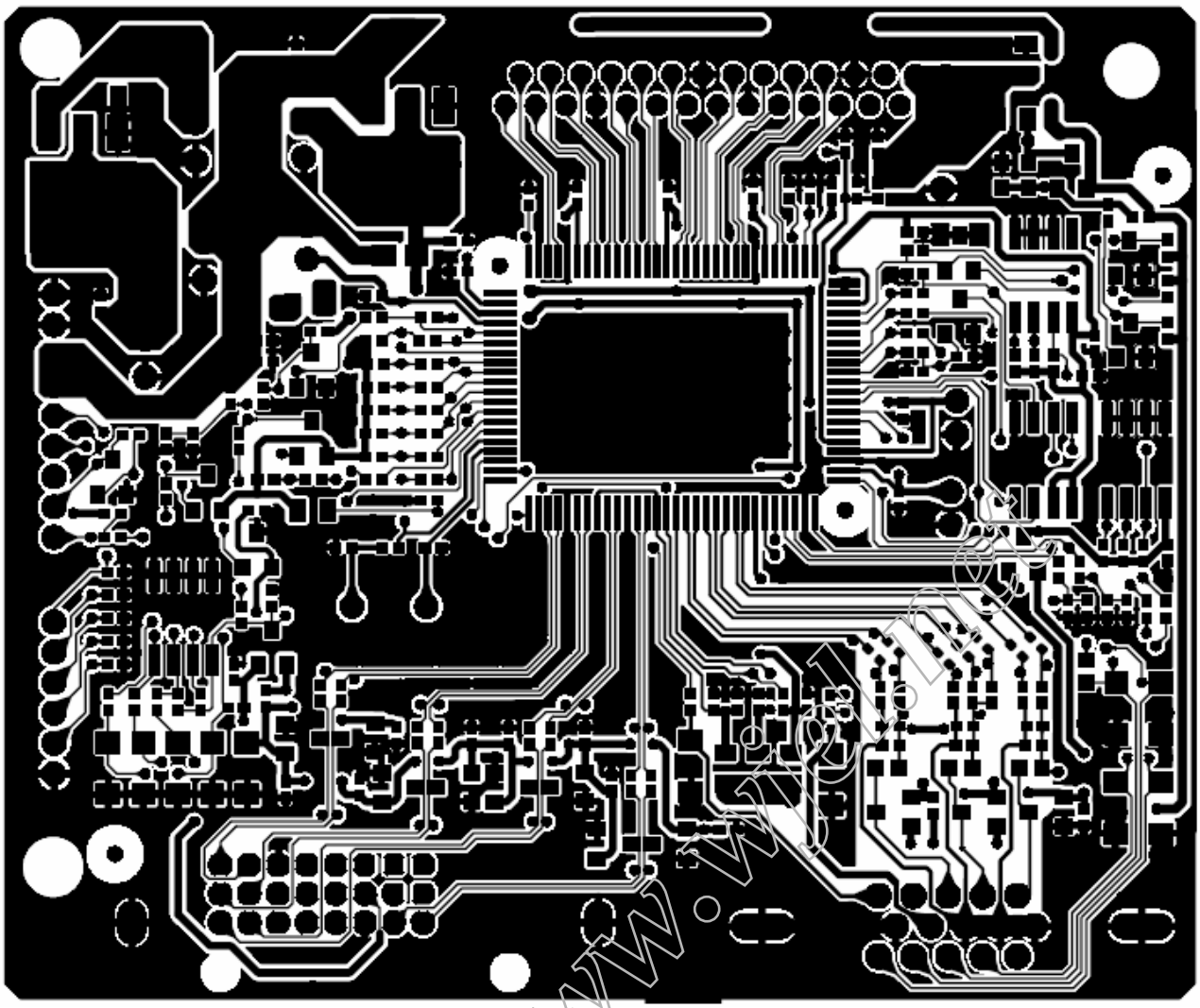

http://www.xxx.cn

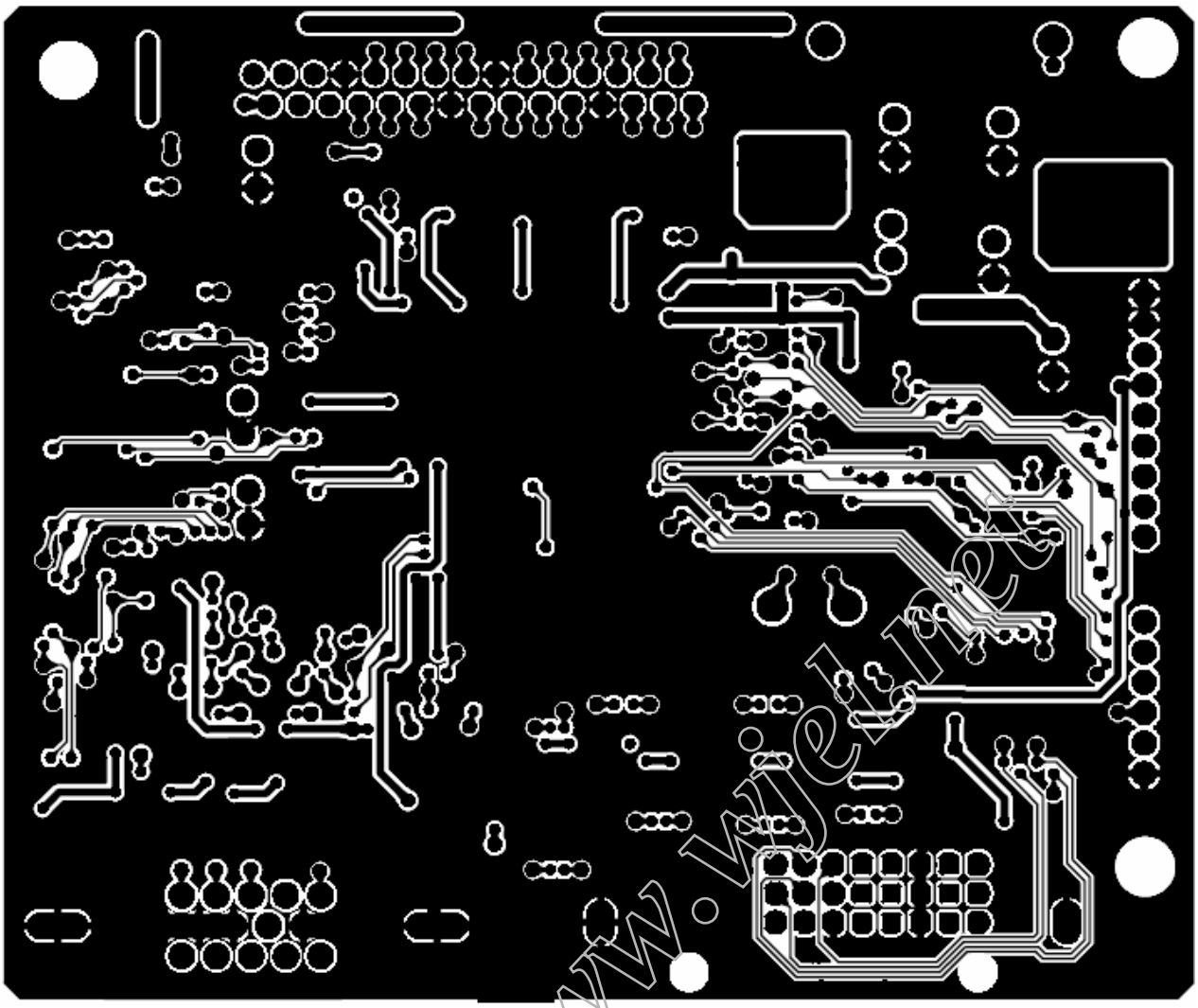

http://www.weinet

7.2 Power Board

715G2538-3

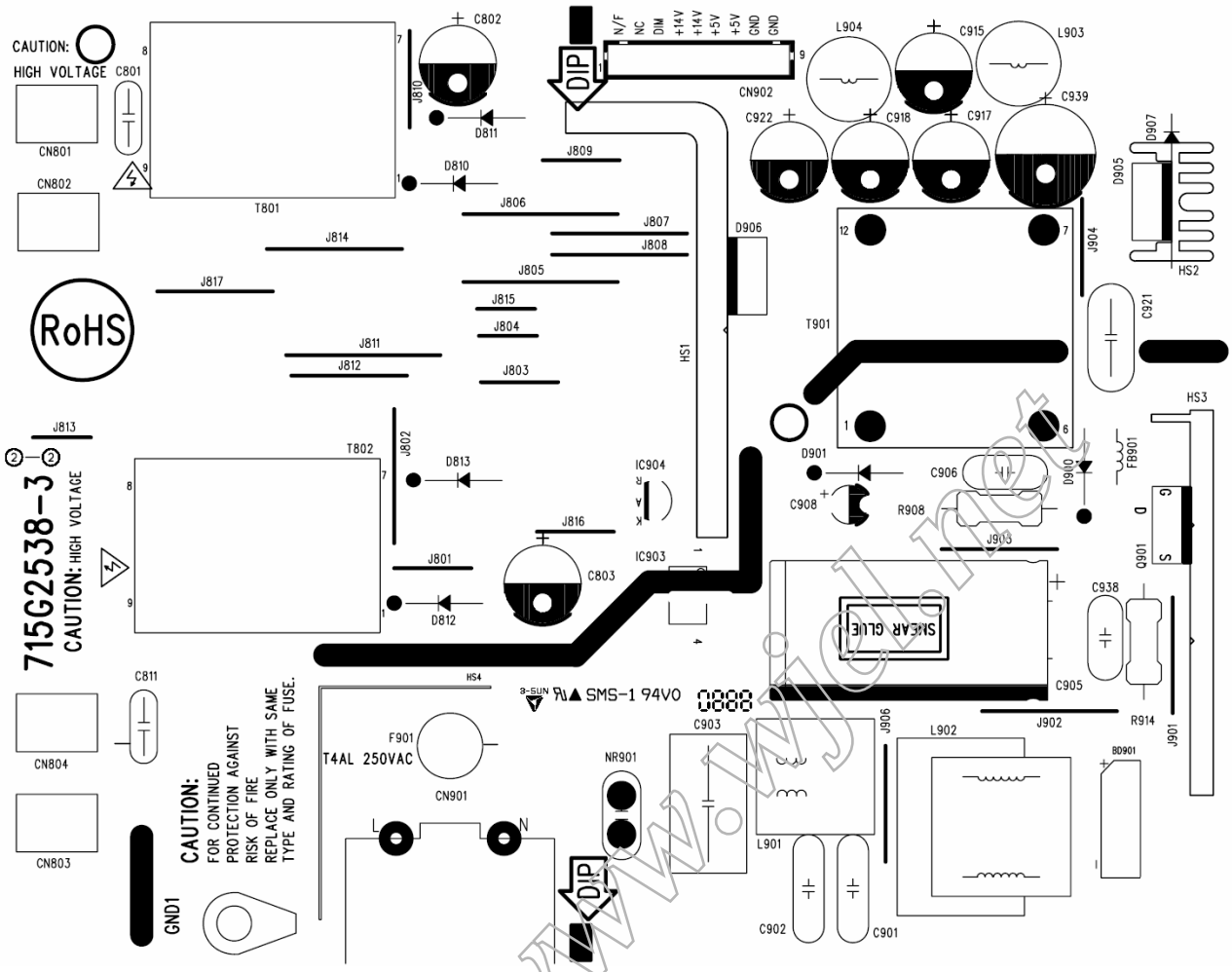

http://www.wiki.net

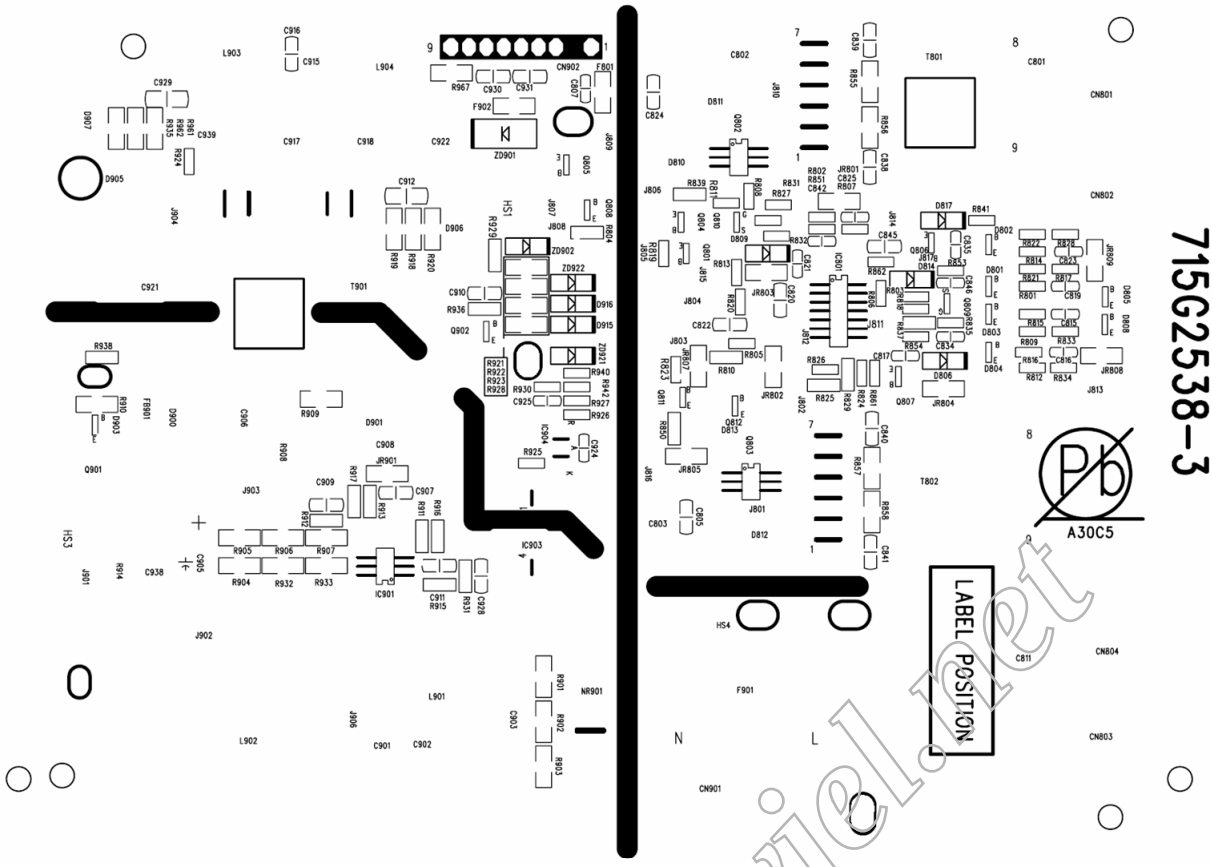

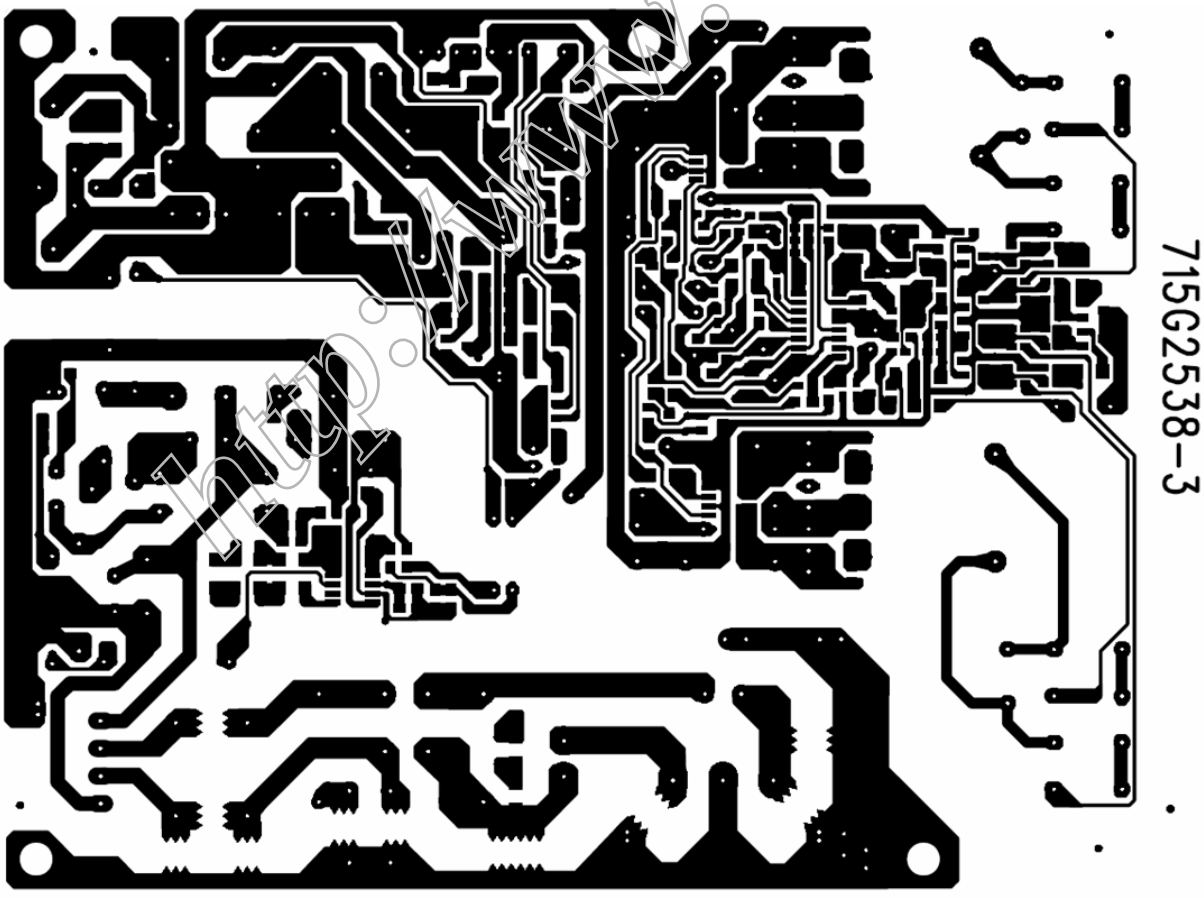

http://www.wjel.net

7.3 Audio Board

715G2767-1

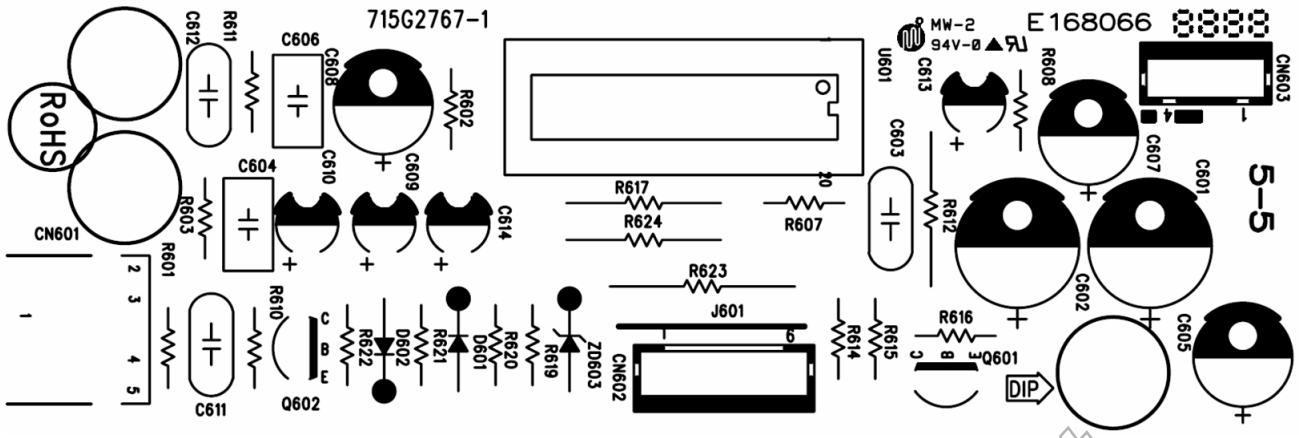

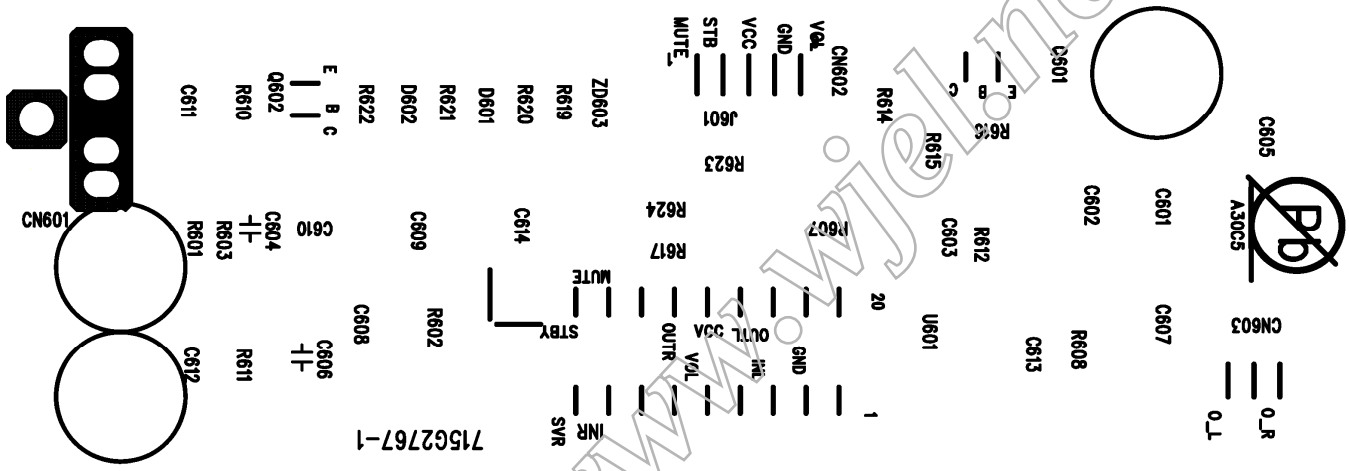

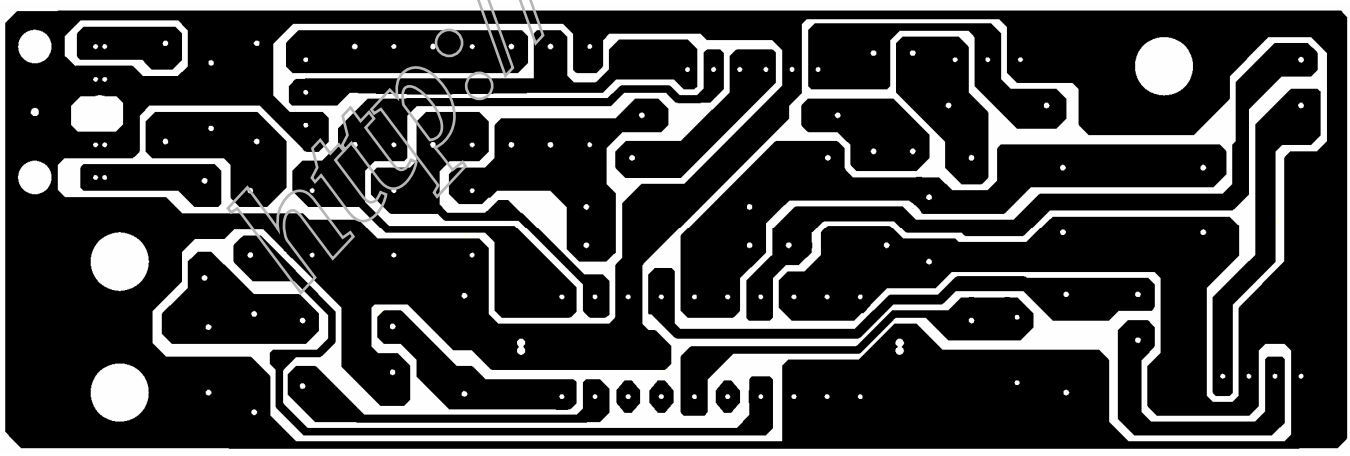

http://www.wjel.net

7.4 Key Board

715G2546-2

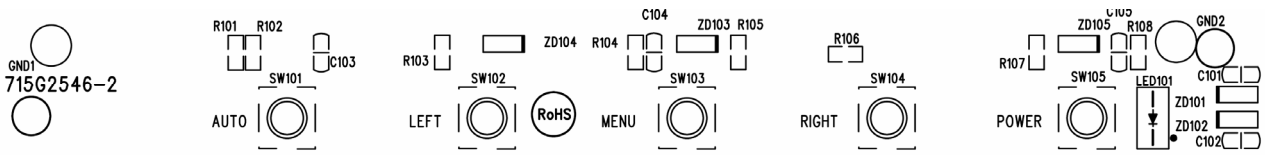

http://www.wel.net

8. Maintainability

8.1 Equipments and Tools Requirement

1. Voltmeter.
2. Oscilloscope.
3. Pattern Generator.
4. DDC Tool with an IBM Compatible Computer.
5. Alignment Tool.
6. LCD Color Analyzer.
7. Service Manual.
8. User Manual.

http://www.wjel.net

8.2 Trouble Shooting

8.2.1 Main Board

(1). No Power

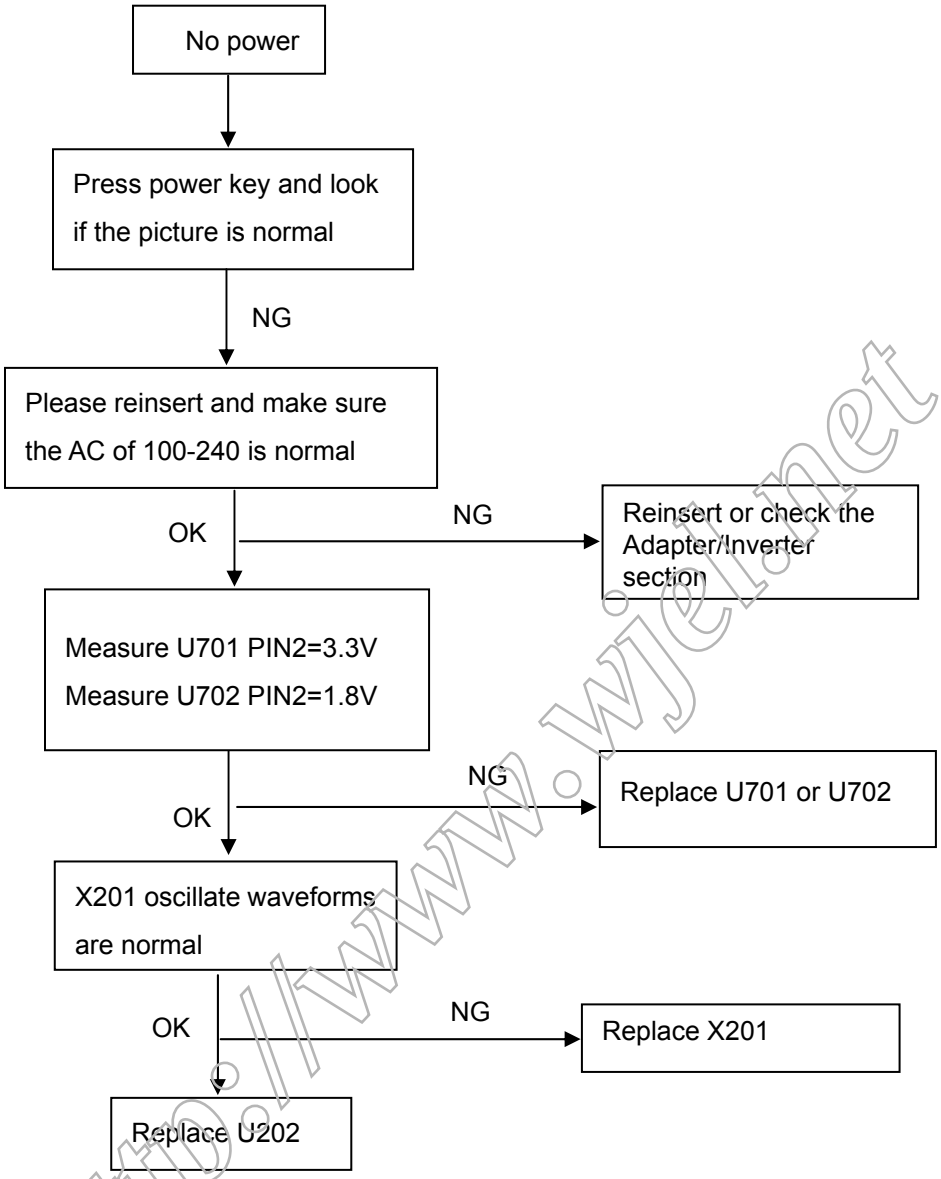

http://www.wjel.net

(2). No Picture

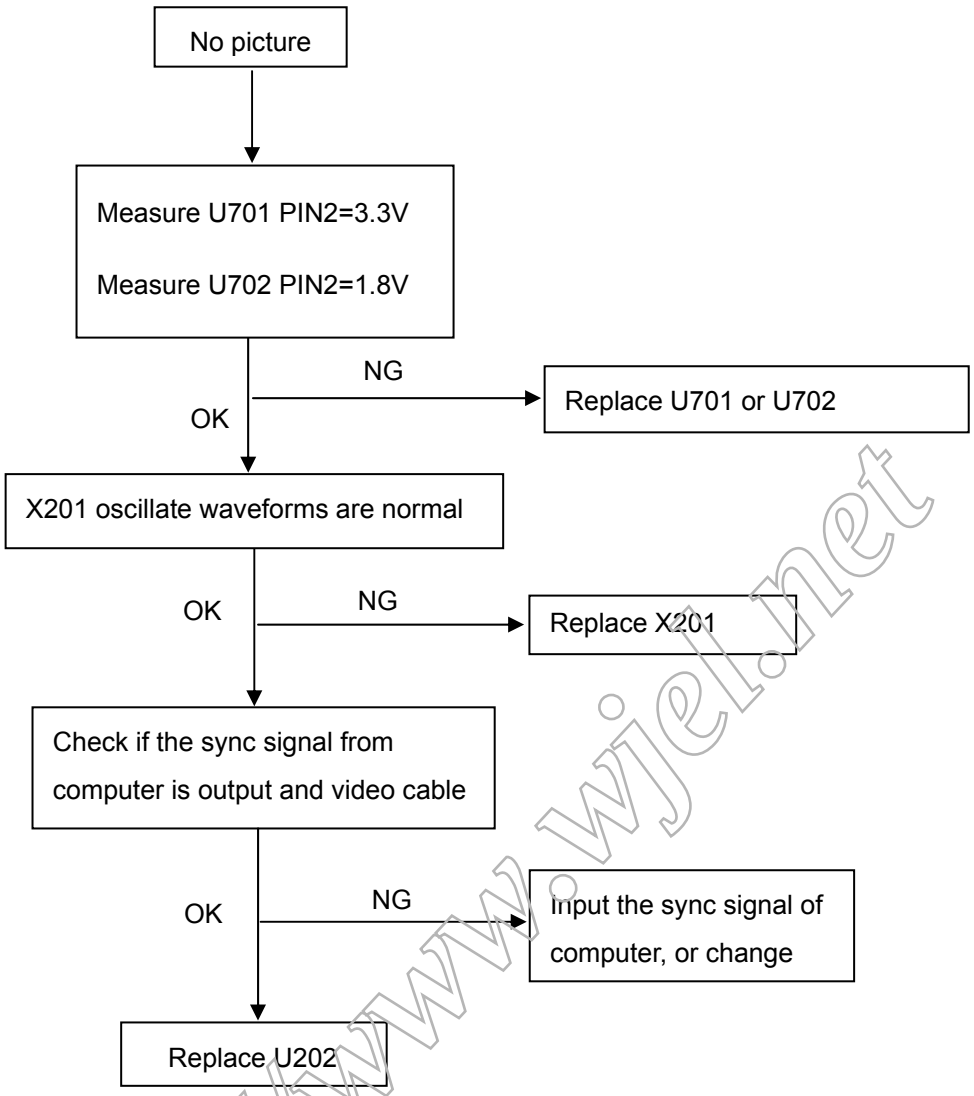

http://www.wjel.net

(3). White screen

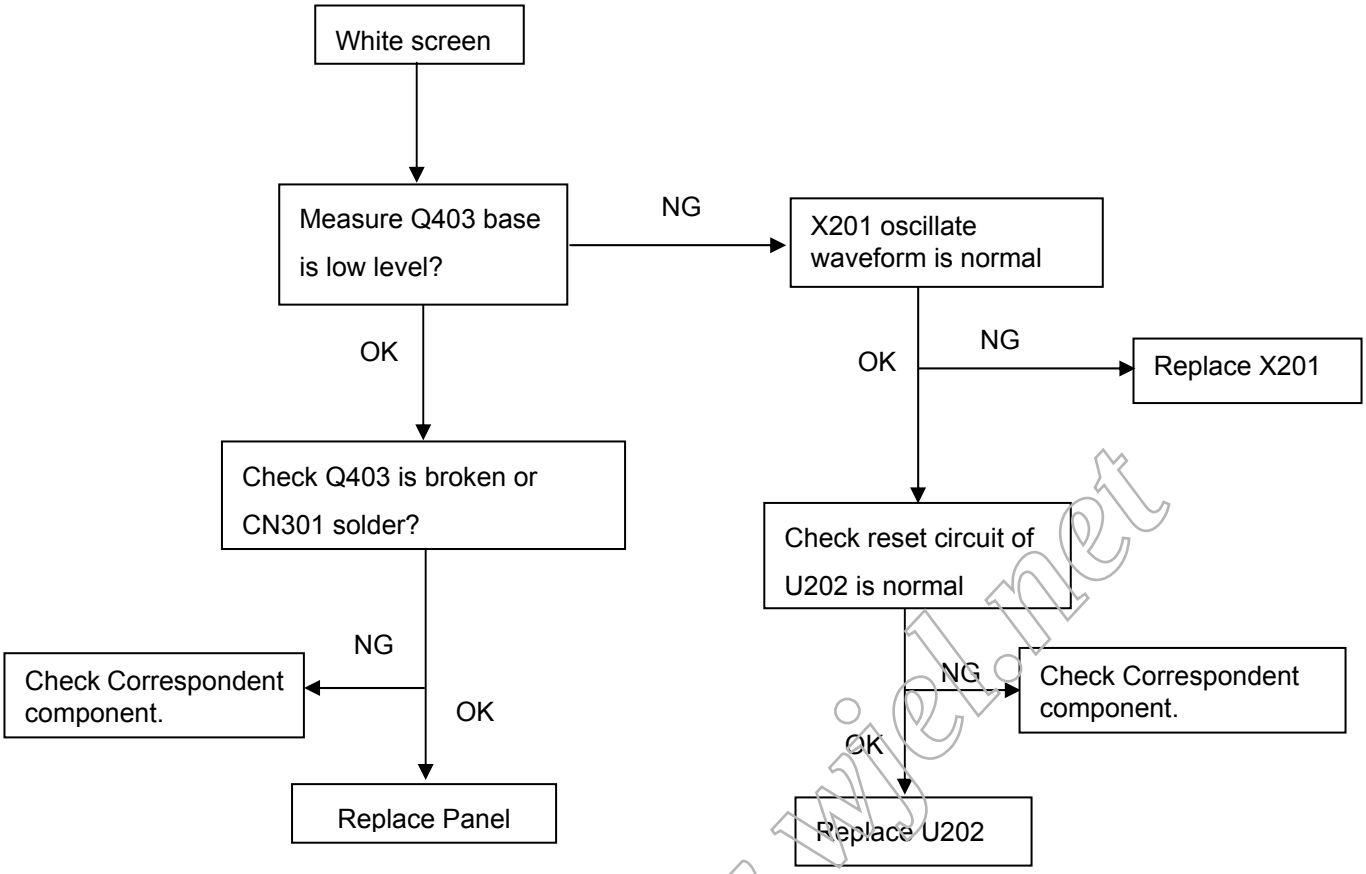

http://www.wiel.net

8.2.2 Power/Inverter Board

1.) No power

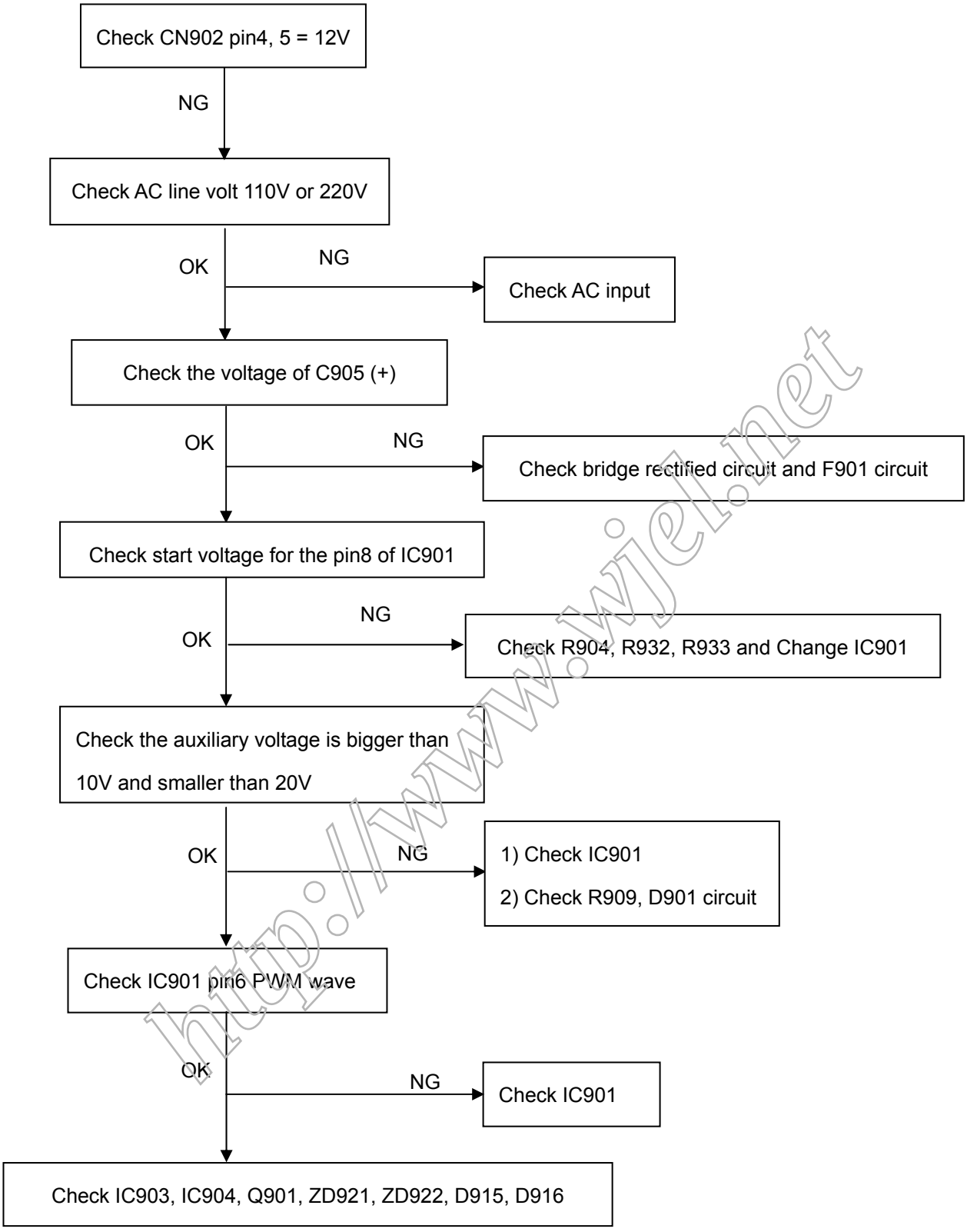

http://www.wjel.net

2.) W / LED, No Backlight

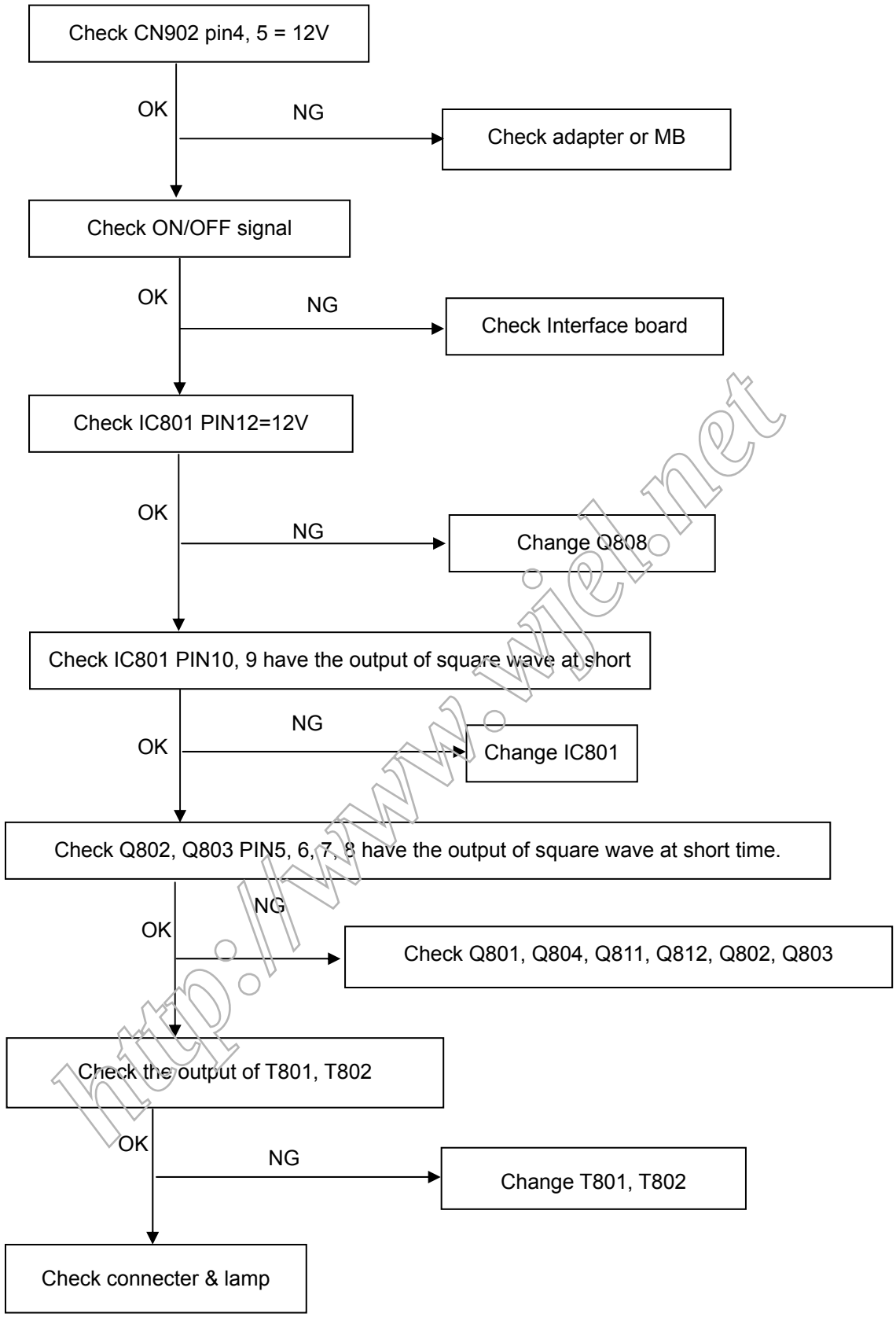

http://www.wiel.net

8.2.3 Key Board

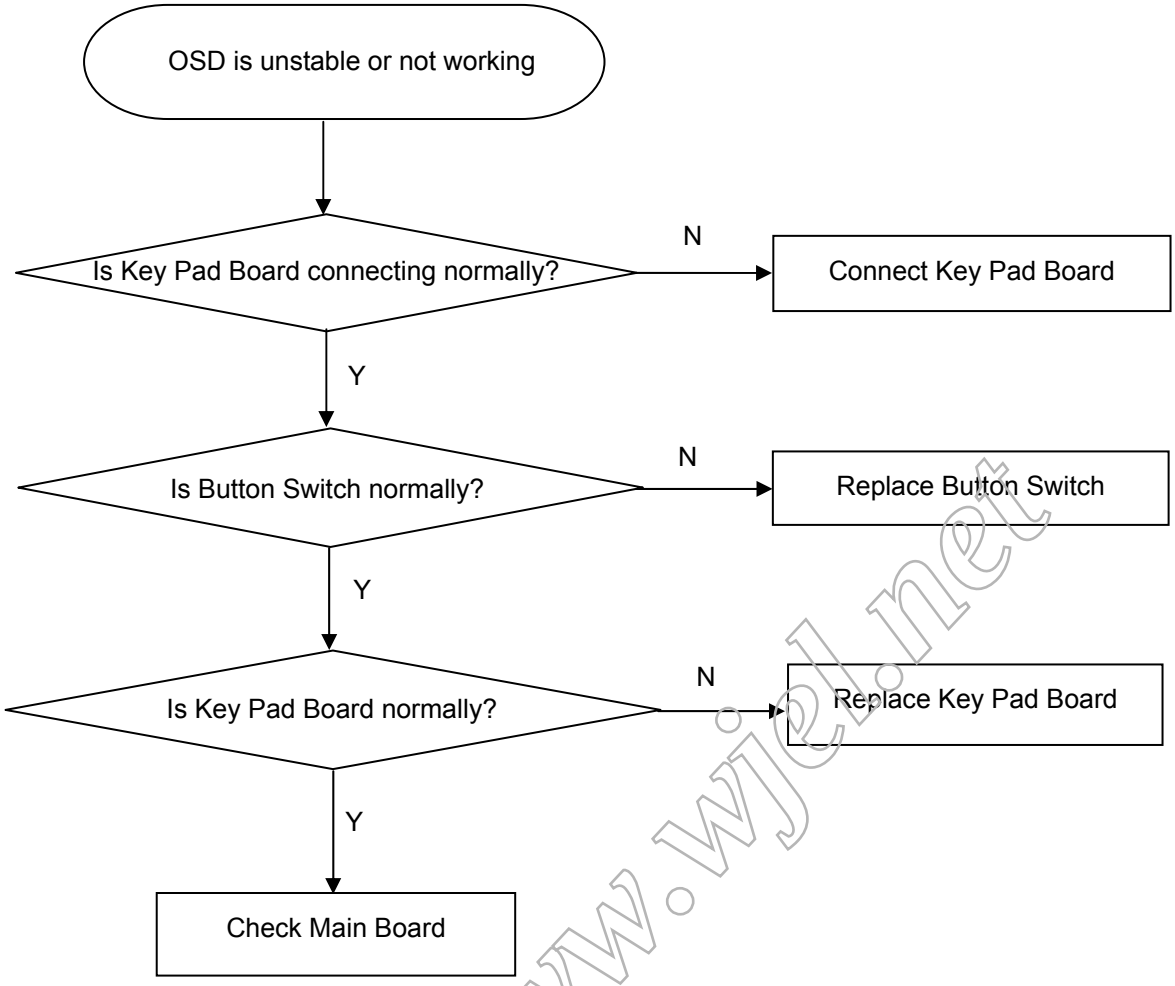

http://www.wjcl.net

9. White- Balance, Luminance Adjustment

Approximately 30 minutes should be allowed for warm up before proceeding white balance adjustment.

Before started adjust white balance , please set the Chroma-7120 MEM Channel 3 to Warm (6500K) color, MEM Channel 4 to Normal (7500K) color, MEM Channel 9 to Cool (9300K) color , and MEM Channel 10 to sRGB color (our Warm color parameter is x = 313 ±20, y = 329 ±20, Y=200cd/m^2(typ); Normal color parameter is x = 299 ±20, y = 315 ±20, Y=200cd/m^2 (typ); Cool color parameter is x = 283 ±20, y = 297 ±20, Y=180cd/m^2 (typ); sRGB color parameter is x = 313 ±20, y = 329 ±20, Y= 150 ±15cd/m^2)

How to setting MEM channel you can reference to chroma 7120 user guide or simple use " SC" key and " NEXT" Key to modify xyY value and use "ID" key to modify the TEXT description Following is the procedure to do white-balance adjust .

2. Setting the color temp. you want

A. MEM.CHANNEL 3 (Warm color):

Warm color temp. parameter is x = 313 ±20, y = 329 ±20, Y=200cd/ m^2(typ)

B. MEM.CHANNEL 4 (Normal color):

Normal color temp. parameter is x = 299 ±20, y = 315 ±20, Y=200cd/ m^2(typ)

C. MEM.CHANNEL 9(Cool color):

Cool color temp. parameter is x = 283 ±20, y = 297 ±20, Y=180cd/m^2 (typ)

D. MEM.CHANNEL 10 (sRGB color):

sRGB color temp. parameter is x = 313 ±20, y = 329 ±20, Y= 150 ±15cd/m^2

3. Into Factory mode of ASUS VW198T:

Press the MENU button, pull out the power cord, and then plug the power cord. Then the factory OSD will be at the left top of the panel.

4. Bias adjustment:

Set the **Contrast** to 50; Adjust the **Brightness** to 80.

5. Gain adjustment:

Move cursor to "-F-" and press MENU key

A. Adjust Warm (6500K) color-temperature

1. Switch the chroma-7120 to **RGB-Mode** (with press "MODE" button)
2. Switch the MEM.channel to Channel 3 (with up or down arrow on chroma 7120)
3. The LCD-indicator on chroma 7120 will show x = 313 ±20, y = 329 ±20, Y=200cd/m^2 (typ)
4. Adjust the RED of color3 on factory window until chroma 7120 indicator reached the value R=100
5. Adjust the GREEN of color3 on factory window until chroma 7120 indicator reachedthe value G=100
6. Adjust the BLUE of color3 on factory window until chroma 7120 indicator reached the value B=100
7. Repeat above procedure (item 4,5,6) until chroma 7120 RGB value meet the tolerance =100±2

B. Adjust Normal (7500K) color-temperature

1. Switch the chroma-7120 to **RGB-Mode** (with press "MODE" button)
2. Switch the MEM.channel to Channel 4(with up or down arrow on chroma 7120)
3. The LCD-indicator on chroma 7120 will show x = 299 ±20, y = 315 ±20, Y=200cd/m^2 (typ)

http://www.wjel.net

4. Adjust the RED of color3 on factory window until chroma 7120 indicator reached the value R=100
5. Adjust the GREEN of color3 on factory window until chroma 7120 indicator reachedthe value G=100
6. Adjust the BLUE of color3 on factory window until chroma 7120 indicator reached the value B=100
7. Repeat above procedure (item 4,5,6) until chroma 7120 RGB value meet the tolerance =100±2

C. Adjust Cool (9300K) color-temperature

1. Switch the Chroma-7120 to **RGB-Mode** (with press "MODE" button)
2. Switch the MEM. Channel to Channel 9 (with up or down arrow on chroma 7120)
3. The LCD-indicator on chroma 7120 will show x = 283 ±20, y = 297 ±20, Y=180cd/m^2 (typ)
4. Adjust the RED of color1 on factory window until chroma 7120 indicator reached the value R=100
5. Adjust the GREEN of color1 on factory window until chroma 7120 indicator reached the value G=100
6. Adjust the BLUE of color1 on factory window until chroma 7120 indicator reached the value B=100
7. Repeat above procedure (item 4,5,6) until chroma 7120 RGB value meet the tolerance =100±2

D. Adjust sRGB color-temperature

1. Switch the chroma-7120 to **RGB-Mode** (with press "MODE" button)
2. Switch the MEM.channel to Channel 10 (with up or down arrow on chroma 7120)
3. The LCD-indicator on chroma 7120 will show x = 313 ±20, y = 329 ±20, Y= 150 ±15cd/m^2
4. Adjust the RED of color3 on factory window until chroma 7120 indicator reached the value R=100
5. Adjust the GREEN of color3 on factory window until chroma 7120 indicator reachedthe value G=100
6. Adjust the BLUE of color3 on factory window until chroma 7120 indicator reached the value B=100
7. Repeat above procedure (item 4,5,6) until chroma 7120 RGB value meet the tolerance =100±2

E. Turn the Power-button off to quit from factory mode.

http://www.vlel.net

10. Monitor Exploded View

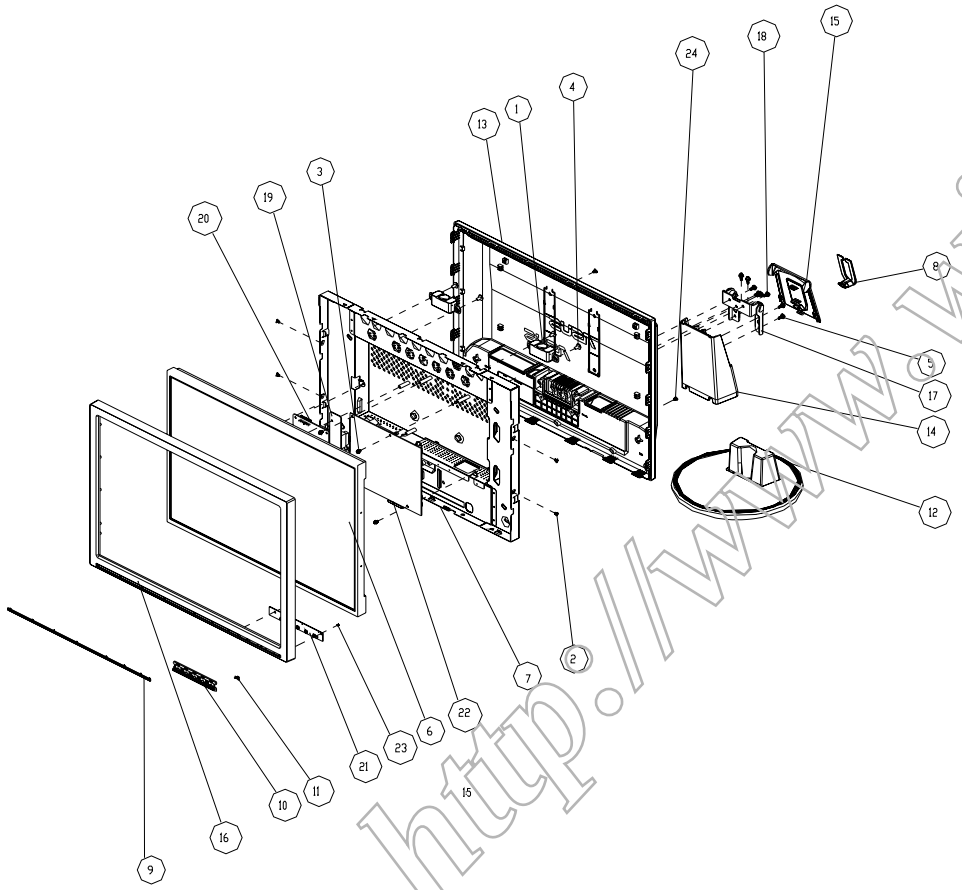

ITEM	PART NO.	REV	DESCRIPTION	Q'TY
1	078G 322 9 Y		SPEAKER	2
2	0M1G 130 5120		screw	4
3	0M1G1730 6120		screw	7
4	0M1G1840 8120		screw	4
5	0Q1G1740 10120		screw	6
6			PANEL M190Z1-L01 CM□	1
7			main frame	1
8			cable clamp	1
9			deco strip	1
10			BUTTON FUNC	1
11			power lens	1
12			BASE	1
13			rear cover	1
14			STAND	1
15			stand cover	1
16			BEZEL L19WA-7ASUS2	1
17			Hinge	1
18	AM1G1740 10125		screw	3
19			audio board	1
20			MAIN B□ARD	1
21			key board	1
22			P□WER B□ARD	1
23	Q1G6019-2		screw	2
24	M1G 930 5 47 CR3		screw	2

REV	INITIAT□R	DATE	DESCRIPTION	D□C NO.

LIMITS UNLESS □THERWISE NOTED

1-6	±0.1	300-1000	±0.8
6-30	±0.2	1000-2000	±1.2
30-100	±0.3	2000-	±2.0
100-300	±0.5	ANGLE	±0.5°

DRAWN	Jeffer.shu		TPV A□C
ENG.			
CHK.			NAME : EXPL□RDED DRAWING
APP□.			
TITLE	ASUS_VW198	PART NO.	T97MMANCPWUSDN
SCALE	UNIT / MATERIAL	FINISH	A3 / SHEET
1:1	mm / TBD		1 □F 1

M04-3009F1 Rev.A

http://www.wjell.net

11. BOM List

T97MMANCPWUSDN

Location	Part No.	Description
	040G 581680 1A	WARRANTY LABEL
	041G 68508 A	CONTROL CARD
	044G6002842 4A	PAPER BOARD
	044G9003220	CORNER PAPER
	044GH600 1	HANDLE 2
	050G 600 1 W	WHITE STRAP
	050G 600 4	HANDLE 1
	052G 1185 49	ASUS TAPE
	052G 1186	SMALL TAPE
	052G 1211 A	165MINIUM TAPE
	070GHDCP500MST	MSTAR HDCP
E089A	089G 728GAA DB	D-SUB
E089B	089G1748CAA AC	SIGNAL CABLE DVI COMLINK
E089C	089G404A18N YH	POWER CABLE
E089E	089G410A18N IS	POWER CORD WALL-OUT FOR UK 32E1818020
	089G412A18NIS3	POWER CORD WALL-OUT AUSTRA 32E1818058
E095A	095G8014 8X697	WIRE HARNESS 8P-8P 350MM
	0M1G 130 5120	SCREW
	0M1G 930 5 47 CR3	SCREW
	0M1G1730 6120	SCREW
	0M1G1730 6120	SCREW
	0M1G1730 6120	SCREW
	705GQ715015	MAIN FRAME ASS'Y(19")
E078	078G 322 9 Y	SPK 8OHM 1.5W 145 200MM 43X18MM SUNLIN
	0M1G1840 8120	SCREW
	A15G0216 5	MAIN FRAME
	705GQ734091	STAND ASS'Y(19")
	0Q1G1740 10120	SCREW
	A34G0330ADJ 1B	STAND
M037	A37G0035 3	HINGE
E750L	750GLM90Z1112N	PANEL M190Z1-L01 NB CMO
	A33G0190ADJ 1L	CABLE CLAMP
	A33G0273 AS 1L	DECO STRIP
	A33G0294 AS 1L	BUTTON FUNC
	A33G0295 1 1C	LENS POWER
	A34G0323ADJ 1B 33	BASE
	A34G0329ADJ 2B 30	REAR COVER(19)

http://www.wel.net

	A34G0331ADJ 1B	STAND_COVER
	A34G0485ADJA1B 30	BEZEL L19WA-7ASUS2
	AM1G1740 10125	SCREW
	AUPC7QU6	AUDIO BOARD
CN603	033G3802 4	WAFER EH-4
CN602	033G3802 6	WAFER
	040G 457624 1B	LABEL-CPU
U601	056G 616 1	IC E-TDA7496L ST
C601	067G215V471 4N GP	KY25VB470M-CC3 10*16
C602	067G215V471 4N GP	KY25VB470M-CC3 10*16
C605	067G215Y4713RV	LOW E.S.R 470UF +-20% 16V
C607	067G215Y4713RV	LOW E.S.R 470UF +-20% 16V
C608	067G215Y4713RV	LOW E.S.R 470UF +-20% 16V
CN601	088G 30210K E	PHONE JACK 5PIN
Q602	057G 414 2	MPS3906
R617	061G 17236252T	3600OHM 5% 1/4W
R607	061G 60210252T	CFR 1K OHM +-5% 1/6W
R608	061G 60210252T	CFR 1K OHM +-5% 1/6W
R622	061G 60210352T	CFR 10KOHM +-5% 1/6W
R621	061G 60210352T	CFR 10KOHM +-5% 1/6W
R620	061G 60210352T	CFR 10KOHM +-5% 1/6W
R619	061G 60210352T	CFR 10KOHM +-5% 1/6W
R601	061G 60218352T	18KOHM 5% 1/6
R603	061G 60218352T	18KOHM 5% 1/6
R610	061G 60220352T	CFR 20K OHM+-5% 1/6W
R611	061G 60220352T	CFR 20K OHM+-5% 1/6W
R602	061G 60220452T	200KOHM 5% 1/6W
R612	061G 60222452T	220KOHM 5% 1/6W
C604	064G178J474 0T6951	CL21X. 0.47UF 50V +-5%
C606	064G178J474 0T6951	CL21X. 0.47UF 50V +-5%
C611	065G 444101 5T	100 PF 10% 50V Y5P
C612	065G 444101 5T	100 PF 10% 50V Y5P
C603	065G 450104 7T	0.1UF +80-20% 50V Y5V
C610	067G215Y1097NT	EC 1.0UF 50V KY50VB1M-TP5 5*11MM
C614	067G215Y1097NT	EC 1.0UF 50V KY50VB1M-TP5 5*11MM
C613	067G215Y1097NT	EC 1.0UF 50V KY50VB1M-TP5 5*11MM
C609	067G215Y1097NT	EC 1.0UF 50V KY50VB1M-TP5 5*11MM
ZD603	093G 39 7752T	HZ5C1-E
D601	093G 64 1152T	1N4148
D602	093G 64 1152T	1N4148

http://www.wiel.net

	715G2767 1	AUDIO BOARD PCB
	Q90G6258 2	HEAT SINK
	CBPC7MMAU2Q1	MAIN BOARD
CN201	033G3802 6	WAFER
CN401	033G3802 9	WAFER 9P RIGHT ANELE PITCH
CN301	033G801930F CH JS	CONNECTOR
	040G 457624 1B	LABEL-CPU
	040G 45762412B	CBPC LABEL
R402	061G152M519 64	5.1OHM 2W
C303	067G 3151014KV	EC 105℃ CAP 100UF M 25V
C402	067G 3151014KV	EC 105℃ CAP 100UF M 25V
C403	067G 3151014KV	EC 105℃ CAP 100UF M 25V
C407	067G 3151014KV	EC 105℃ CAP 100UF M 25V
C408	067G 3151014KV	EC 105℃ CAP 100UF M 25V
C220	067G215V100 7R	LOW E.S.R 10UF +/-20% 50V
C209	067G215V100 7R	LOW E.S.R 10UF +/-20% 50V
C202	067G215V100 7R	LOW E.S.R 10UF +/-20% 50V
CN101	088G 35315F HJ	SOC SUBD H 15P F
CN103	088G 35424F N	DVI 24PIN CONN F
X201	093G 2253B J	14.31818MHZ/85C
	Q85G 583605	GASKET
U202	056G 562172	IC TSUMU58BWHL-LF PQFP-100
U702	056G 563 31	AI1117D-1.8-EI
U701	056G 563114	IC G1117-33T63UF 1A/3.3V SOT-223
U102	056G1133 84	AF24BC02-S1
U101	056G1133 84	AF24BC02-S1
U204	056G1133 89	IC AF24BC16-SI 16K SOIC-8
U402	056G1133713	IC PM25LV010A-100SCE SOIC-8
Q403	057G 417 12 T	KEC 2N3904S-RTK/PS
Q201	057G 417 12 T	KEC 2N3904S-RTK/PS
Q301	057G 417 13 T	KEC 2N3906S-RTK/PS
Q203	057G 417 13 T	KEC 2N3906S-RTK/PS
Q202	057G 417 13 T	KEC 2N3906S-RTK/PS
Q302	057G 763 1	A03401 SOT23 BY AOS(A1)
R206	061G0402000	RST CHIPR 0 OHM +-5% 1/16W
R139	061G0402000	RST CHIPR 0 OHM +-5% 1/16W
R138	061G0402000	RST CHIPR 0 OHM +-5% 1/16W
R201	061G0402000	RST CHIPR 0 OHM +-5% 1/16W
R136	061G0402100	RST CHIPR 10 OHM +-5% 1/16W
R133	061G0402100	RST CHIPR 10 OHM +-5% 1/16W

http://www.wjel.net

R131	061G0402100	RST CHIPR 10 OHM +-5% 1/16W
R130	061G0402100	RST CHIPR 10 OHM +-5% 1/16W
R129	061G0402100	RST CHIPR 10 OHM +-5% 1/16W
R128	061G0402100	RST CHIPR 10 OHM +-5% 1/16W
R127	061G0402100	RST CHIPR 10 OHM +-5% 1/16W
R126	061G0402100	RST CHIPR 10 OHM +-5% 1/16W
R207	061G0402101	RST CHIPR 100 OHM +-5% 1/16W
R122	061G0402101	RST CHIPR 100 OHM +-5% 1/16W
R119	061G0402101	RST CHIPR 100 OHM +-5% 1/16W
R117	061G0402101	RST CHIPR 100 OHM +-5% 1/16W
R114	061G0402101	RST CHIPR 100 OHM +-5% 1/16W
R113	061G0402101	RST CHIPR 100 OHM +-5% 1/16W
R110	061G0402101	RST CHIPR 100 OHM +-5% 1/16W
R108	061G0402101	RST CHIPR 100 OHM +-5% 1/16W
R406	061G0402101	RST CHIPR 100 OHM +-5% 1/16W
R220	061G0402101	RST CHIPR 100 OHM +-5% 1/16W
R225	061G0402101	RST CHIPR 100 OHM +-5% 1/16W
R224	061G0402101	RST CHIPR 100 OHM +-5% 1/16W
R222	061G0402101	RST CHIPR 100 OHM +-5% 1/16W
R221	061G0402101	RST CHIPR 100 OHM +-5% 1/16W
R215	061G0402101	RST CHIPR 100 OHM +-5% 1/16W
R214	061G0402101	RST CHIPR 100 OHM +-5% 1/16W
R213	061G0402101	RST CHIPR 100 OHM +-5% 1/16W
R102	061G0402102	RST CHIPR 1 KOHM +-5% 1/16W
R103	061G0402102	RST CHIPR 1 KOHM +-5% 1/16W
R140	061G0402102	RST CHIPR 1 KOHM +-5% 1/16W
R118	061G0402103	RST CHIPR 10 KOHM +-5% 1/16W
R123	061G0402103	RST CHIPR 10 KOHM +-5% 1/16W
R132	061G0402103	RST CHIPR 10 KOHM +-5% 1/16W
R137	061G0402103	RST CHIPR 10 KOHM +-5% 1/16W
R210	061G0402103	RST CHIPR 10 KOHM +-5% 1/16W
R209	061G0402103	RST CHIPR 10 KOHM +-5% 1/16W
R205	061G0402103	RST CHIPR 10 KOHM +-5% 1/16W
R203	061G0402103	RST CHIPR 10 KOHM +-5% 1/16W
R211	061G0402103	RST CHIPR 10 KOHM +-5% 1/16W
R223	061G0402103	RST CHIPR 10 KOHM +-5% 1/16W
R226	061G0402103	RST CHIPR 10 KOHM +-5% 1/16W
R227	061G0402103	RST CHIPR 10 KOHM +-5% 1/16W
R230	061G0402103	RST CHIPR 10 KOHM +-5% 1/16W
R231	061G0402103	RST CHIPR 10 KOHM +-5% 1/16W

http://www.mele.net

R232	061G0402103	RST CHIPR 10 KOHM +-5% 1/16W
R403	061G0402103	RST CHIPR 10 KOHM +-5% 1/16W
R401	061G0402103	RST CHIPR 10 KOHM +-5% 1/16W
R301	061G0402103	RST CHIPR 10 KOHM +-5% 1/16W
R405	061G0402103	RST CHIPR 10 KOHM +-5% 1/16W
R234	061G0402103	RST CHIPR 10 KOHM +-5% 1/16W
R305	061G0402103	RST CHIPR 10 KOHM +-5% 1/16W
R219	061G0402104	RST CHIPR 100 KOHM +-5% 1/16W
R106	061G0402222	RST CHIPR 2.2 KOHM +-5% 1/16W
R105	061G0402222	RST CHIPR 2.2 KOHM +-5% 1/16W
R202	061G0402223	RST CHIPR 22 KOHM +-5% 1/16W
R204	061G0402390 0F	RST CHIP 390R 1/16W 1%
R229	061G0402390 1F	RST CHIPR 3.9KOHM +-1% 1/16W
R228	061G0402390 1F	RST CHIPR 3.9KOHM +-1% 1/16W
R109	061G0402471	RST CHIPR 470 OHM +-5% 1/16W
R120	061G0402472	RST CHIPR 4.7 KOHM +-5% 1/16W
R121	061G0402472	RST CHIPR 4.7 KOHM +-5% 1/16W
R134	061G0402472	RST CHIPR 4.7 KOHM +-5% 1/16W
R135	061G0402472	RST CHIPR 4.7 KOHM +-5% 1/16W
R217	061G0402472	RST CHIPR 4.7 KOHM +-5% 1/16W
R218	061G0402472	RST CHIPR 4.7 KOHM +-5% 1/16W
R404	061G0402472	RST CHIPR 4.7 KOHM +-5% 1/16W
R304	061G0402473	RST CHIPR 47 KOHM +-5% 1/16W
R216	061G0402560	RST CHIP 56R 1/16W 5%
R104	061G0402560	RST CHIP 56R 1/16W 5%
R111	061G0402560	RST CHIP 56R 1/16W 5%
R115	061G0402560	RST CHIP 56R 1/16W 5%
R208	061G0402682	RST CHIP 6K8 1/16W 5%
R233	061G0402682	RST CHIP 6K8 1/16W 5%
R107	061G0402750	RST CHIPR 75 OHM +-5% 1/16W
R112	061G0402750	RST CHIPR 75 OHM +-5% 1/16W
R116	061G0402750	RST CHIPR 75 OHM +-5% 1/16W
R212	061G0402750	RST CHIPR 75 OHM +-5% 1/16W
R101	061G0603000	RST CHIPR 0 OHM +-5% 1/10W
FB101	061G0603000	RST CHIPR 0 OHM +-5% 1/10W
FB102	061G0603000	RST CHIPR 0 OHM +-5% 1/10W
FB103	061G0603000	RST CHIPR 0 OHM +-5% 1/10W
R302	061G0805331	RST CHIPR 330 OHM +-5% 1/8W
C106	065G0402102 32	1000PF +-10% 50V X7R
C213	065G0402104 15	MLCC 0402 0.1UF K 16V X5R

http://www.mei.net

C212	065G0402104 15	MLCC 0402 0.1UF K 16V X5R
C211	065G0402104 15	MLCC 0402 0.1UF K 16V X5R
C210	065G0402104 15	MLCC 0402 0.1UF K 16V X5R
C208	065G0402104 15	MLCC 0402 0.1UF K 16V X5R
C204	065G0402104 15	MLCC 0402 0.1UF K 16V X5R
C205	065G0402104 15	MLCC 0402 0.1UF K 16V X5R
C206	065G0402104 15	MLCC 0402 0.1UF K 16V X5R
C207	065G0402104 15	MLCC 0402 0.1UF K 16V X5R
C214	065G0402104 15	MLCC 0402 0.1UF K 16V X5R
C401	065G0402104 15	MLCC 0402 0.1UF K 16V X5R
C405	065G0402104 15	MLCC 0402 0.1UF K 16V X5R
C409	065G0402104 15	MLCC 0402 0.1UF K 16V X5R
C410	065G0402104 15	MLCC 0402 0.1UF K 16V X5R
C411	065G0402104 15	MLCC 0402 0.1UF K 16V X5R
C118	065G0402104 15	MLCC 0402 0.1UF K 16V X5R
C119	065G0402104 15	MLCC 0402 0.1UF K 16V X5R
C120	065G0402104 15	MLCC 0402 0.1UF K 16V X5R
C121	065G0402104 15	MLCC 0402 0.1UF K 16V X5R
C122	065G0402104 15	MLCC 0402 0.1UF K 16V X5R
C123	065G0402104 15	MLCC 0402 0.1UF K 16V X5R
C124	065G0402104 15	MLCC 0402 0.1UF K 16V X5R
C125	065G0402104 15	MLCC 0402 0.1UF K 16V X5R
C215	065G0402104 15	MLCC 0402 0.1UF K 16V X5R
C216	065G0402104 15	MLCC 0402 0.1UF K 16V X5R
C217	065G0402104 15	MLCC 0402 0.1UF K 16V X5R
C219	065G0402104 15	MLCC 0402 0.1UF K 16V X5R
C223	065G0402104 15	MLCC 0402 0.1UF K 16V X5R
C225	065G0402104 15	MLCC 0402 0.1UF K 16V X5R
C226	065G0402104 15	MLCC 0402 0.1UF K 16V X5R
C227	065G0402104 15	MLCC 0402 0.1UF K 16V X5R
C228	065G0402104 15	MLCC 0402 0.1UF K 16V X5R
C229	065G0402104 15	MLCC 0402 0.1UF K 16V X5R
C231	065G0402104 15	MLCC 0402 0.1UF K 16V X5R
C301	065G0402104 15	MLCC 0402 0.1UF K 16V X5R
C302	065G0402104 15	MLCC 0402 0.1UF K 16V X5R
C203	065G0402104 15	MLCC 0402 0.1UF K 16V X5R
C201	065G0402104 15	MLCC 0402 0.1UF K 16V X5R
C117	065G0402104 15	MLCC 0402 0.1UF K 16V X5R
C115	065G0402104 15	MLCC 0402 0.1UF K 16V X5R
C112	065G0402104 15	MLCC 0402 0.1UF K 16V X5R

http://www.vinafix.net

C103	065G0402220 31	CHIP 22PF 50V NPO
C102	065G0402220 31	CHIP 22PF 50V NPO
C218	065G0402224 17	CAP CER 0.22UF -20%-80%
C224	065G0402224 17	CAP CER 0.22UF -20%-80%
C114	065G0402224 17	CAP CER 0.22UF -20%-80%
C116	065G0402224 17	CAP CER 0.22UF -20%-80%
C222	065G0402270 31	0402 27PF J 50V NPO
C221	065G0402270 31	0402 27PF J 50V NPO
C101	065G0402473 12	CHIP 0.047UF 16V X7R
C105	065G0402473 12	CHIP 0.047UF 16V X7R
C107	065G0402473 12	CHIP 0.047UF 16V X7R
C109	065G0402473 12	CHIP 0.047UF 16V X7R
C110	065G0402473 12	CHIP 0.047UF 16V X7R
C113	065G0402473 12	CHIP 0.047UF 16V X7R
FB301	071G 56K121 M	CHIP BEAD
FB206	071G 56V301 B	CHIP BEAD FCM2012VF-301T07 BULLWILL
FB205	071G 56V301 B	CHIP BEAD FCM2012VF-301T07 BULLWILL
FB204	071G 56V301 B	CHIP BEAD FCM2012VF-301T07 BULLWILL
FB203	071G 56V301 B	CHIP BEAD FCM2012VF-301T07 BULLWILL
FB201	071G 56V301 B	CHIP BEAD FCM2012VF-301T07 BULLWILL
D101	093G 64 42 P	BAV70 SOT23 BY PAN JIT
D105	093G 64 42 P	BAV70 SOT23 BY PAN JIT
D102	093G 6433S	DIODE BAV99 SEMTECH
D103	093G 6433S	DIODE BAV99 SEMTECH
D104	093G 6433S	DIODE BAV99 SEMTECH
D110	093G 6433S	DIODE BAV99 SEMTECH
D111	093G 6433S	DIODE BAV99 SEMTECH
D112	093G 6433S	DIODE BAV99 SEMTECH
D113	093G 6433S	DIODE BAV99 SEMTECH
D114	093G 6433S	DIODE BAV99 SEMTECH
D115	093G 6433S	DIODE BAV99 SEMTECH
D116	093G 6433S	DIODE BAV99 SEMTECH
D117	093G 6433S	DIODE BAV99 SEMTECH
ZD105	093G 39GA01 T	RLZ5.6B
ZD104	093G 39GA01 T	RLZ5.6B
ZD103	093G 39GA01 T	RLZ5.6B
ZD102	093G 39GA01 T	RLZ5.6B
ZD101	093G 39GA01 T	RLZ5.6B
D109	093G 39GA01 T	RLZ5.6B
D108	093G 39GA01 T	RLZ5.6B

http://www.mydiy.net

D107	093G 39GA01 T	RLZ5.6B
D106	093G 39GA01 T	RLZ5.6B
ZD106	093G 39GA01 T	RLZ5.6B
D118	093G 39GA01 T	RLZ5.6B
	715G2698 3	MAIN BOARD PCB
	KEPC7QAA6	KEY BOARD
CN101	033G8032 8D	WAFER 1.25MM
R102	061G0603000	RST CHIPR 0 OHM +-5% 1/10W
R105	061G0603000	RST CHIPR 0 OHM +-5% 1/10W
R108	061G0603000	RST CHIPR 0 OHM +-5% 1/10W
R103	061G0603102	RST CHIP 1K 1/10W 5%
R106	061G0603102	RST CHIP 1K 1/10W 5%
C101	065G0603104 37	CHIP 0.1UF 50V/Y5V
C102	065G0603104 37	CHIP 0.1UF 50V/Y5V
C103	065G0603104 37	CHIP 0.1UF 50V/Y5V
C104	065G0603104 37	CHIP 0.1UF 50V/Y5V
C105	065G0603104 37	CHIP 0.1UF 50V/Y5V
SW101	077G 604 2 TO	TACT 5W BY TOUKE TS-9-TMG-553
SW104	077G 604 2 TO	TACT 5W BY TOUKE TS-9-TMG-553
SW105	077G 604 2 TO	TACT 5W BY TOUKE TS-9-TMG-553
SW103	077G 604 2 TO	TACT 5W BY TOUKE TS-9-TMG-553
SW102	077G 604 2 TO	TACT 5W BY TOUKE TS-9-TMG-553
LED101	081G 14 12 KT	CHIP LED
ZD101	093G 39P599 T	MM3Z5V6B
ZD102	093G 39P599 T	MM3Z5V6B
	715G2546 2	KEY BOARD PCB
	PWPC942MU2	POWER BOARD
CN801	033G8021 2E F	WAFER
CN802	033G8021 2E F	WAFER
CN803	033G8021 2E F	WAFER
CN804	033G8021 2E F	WAFER
	040G 45762420A	LABEL 25X6MM
	051G 6 4503	RTV
IC903	056G 139 3A	IC PC123Y22FZ0F
NR901	061G 58080 WT	8 OHM NCT
R908	061G152M104 64	100KOHM 5% 2W
R914	061G152M228 64	0.22 OHM 5% 2W
C903	063G107K474 6S	CAP X2 0.47UF K 275VAC
C811	065G 6J1006ET	10PF 5% SL 6KV
C801	065G 6J1006ET	10PF 5% SL 6KV

http://www.wiel.net

C902	065G305M1022BP	Y2 1000PF M 250VAC Y5P
C901	065G305M1022BP	Y2 1000PF M 250VAC Y5P
C921	065G306M4722BP	4700PF +-20% 400VAC
C905	067G 40Z10115K	CAP 105℃ 100UF M 450V
C803	067G215D4714KV	E.C 105℃ CAP 470UF M 25V ED SERIES
C802	067G215D4714KV	E.C 105℃ CAP 470UF M 25V ED SERIES
C918	067G215D6814KV	CAP 105℃ 680UF M 25V
C917	067G215D6814KV	CAP 105℃ 680UF M 25V
C939	067G215S1024KV	EC 105℃ CAP 1000UF M 25V
C915	067G215S4713KV	EC 105℃ CAP 470UF M 16V
L902	073G 174 65 H	LINE FILTER
L901	073G 174 76 H	FILTER
L903	073G 253191 H	IND CHOKE 1.1UH DADON
L904	073G 253191 YS	CHOKE COIL 1.1UH YS04110055
T901	080GL19T 23 YS	X'FMR 510UH YS04160061
T801	080GL19T 24 YS	X'FMR 740MH YS04170157
T802	080GL19T 24 YS	X'FMR 740MH YS04170157
CN901	087G 501 37 S	AC INLET ST-01DG-B2K-K
BD901	093G 50460 28	BRIDGE DIODE KBP208G LITEON
CN902	095G 825 9D 1	HARNESS 9P(SCN)-9P+6P 230MM
	705G 193 57 01	Q901 ASS'Y
Q901	057G 667 21	STP10NK70ZFP
	090G6263 1	HEAT SINK
	AM1G1730 8120 GP	SCREW
	705G 193 93 01	D906 ASS'Y
D906	093G 60218	SB10100FCT
	AM1G1730 8120 GP	SCREW
	Q90G6274 2	HEAT SINK
	705GQ9KA 93002	D905 ASS"Y
	090G6084 1	HEAT SINK
D905	093G 60257	DIODE SB1060FCT ITO-220AB BY PAN JIT
	0M1G1730 8120	SCREW
IC801	056G 379 22	IC TL494IDR SOIC-16
IC901	056G 379 71	IC TEA1530AT/N1 SO-8 PHILIPS
Q801	057G 417 4	PMBS3904/PHILIPS-SMT(04)
Q806	057G 417 4	PMBS3904/PHILIPS-SMT(04)
Q807	057G 417 4	PMBS3904/PHILIPS-SMT(04)
Q811	057G 417 4	PMBS3904/PHILIPS-SMT(04)
Q902	057G 417 4	PMBS3904/PHILIPS-SMT(04)
Q812	057G 417 6	PMBS3906/PHILIPS-SMT(06)

http://www.mytel.net

Q804	057G 417 6	PMBS3906/PHILIPS-SMT(06)
Q810	057G 759 2	RK7002
Q809	057G 759 2	RK7002
Q808	057G 760 4B	PDTA144WK SOT346
Q805	057G 760 5B	PDTC144WK SOT346
Q802	057G 763 14	AM9945N
Q803	057G 763 14	AM9945N
R809	061G0603100 1F	RST CHIPR 1 KOHM +-1% 1/10W
R812	061G0603100 1F	RST CHIPR 1 KOHM +-1% 1/10W
R818	061G0603100 1F	RST CHIPR 1 KOHM +-1% 1/10W
R821	061G0603100 1F	RST CHIPR 1 KOHM +-1% 1/10W
R822	061G0603100 1F	RST CHIPR 1 KOHM +-1% 1/10W
R824	061G0603100 1F	RST CHIPR 1 KOHM +-1% 1/10W
R826	061G0603100 1F	RST CHIPR 1 KOHM +-1% 1/10W
R925	061G0603100 1F	RST CHIPR 1 KOHM +-1% 1/10W
R942	061G0603100 1F	RST CHIPR 1 KOHM +-1% 1/10W
R851	061G0603100 2F	RST CHIPR 10 KOHM +-1% 1/10W
R926	061G0603100 2F	RST CHIPR 10 KOHM +-1% 1/10W
R834	061G0603100 2F	RST CHIPR 10 KOHM +-1% 1/10W
R833	061G0603100 2F	RST CHIPR 10 KOHM +-1% 1/10W
R832	061G0603100 2F	RST CHIPR 10 KOHM +-1% 1/10W
R828	061G0603100 2F	RST CHIPR 10 KOHM +-1% 1/10W
R817	061G0603100 2F	RST CHIPR 10 KOHM +-1% 1/10W
R813	061G0603100 2F	RST CHIPR 10 KOHM +-1% 1/10W
R808	061G0603100 2F	RST CHIPR 10 KOHM +-1% 1/10W
R835	061G0603105	RST CHIPR 1 MOHM +-5% 1/10W
R862	061G0603105	RST CHIPR 1 MOHM +-5% 1/10W
R801	061G0603150 1F	RST CHIPR 1.5 KOHM +-1% 1/10W
R814	061G0603150 1F	RST CHIPR 1.5 KOHM +-1% 1/10W
R815	061G0603150 1F	RST CHIPR 1.5 KOHM +-1% 1/10W
R816	061G0603150 1F	RST CHIPR 1.5 KOHM +-1% 1/10W
R924	061G0603152	RST CHIPR 1.5 KOHM +-5% 1/10W
R811	061G0603240 1F	RST CHIPR 2.4 KOHM +-1% 1/10W
R831	061G0603240 1F	RST CHIPR 2.4 KOHM +-1% 1/10W
R930	061G0603240 1F	RST CHIPR 2.4 KOHM +-1% 1/10W
R940	061G0603330 2F	RST CHIPR 33 KOHM +-1% 1/10W
R927	061G0603360 1F	RST CHIPR 3.6 KOHM +-1% 1/10W
R827	061G0603362	RST CHIPR 3.6 KOHM +-5% 1/10W
R823	061G0603362	RST CHIPR 3.6 KOHM +-5% 1/10W
R819	061G0603362	RST CHIPR 3.6 KOHM +-5% 1/10W

http://www.vinc.net

R861	061G0603390 3F	RST CHIPR 390 KOHM +-1% 1/10W
R820	061G0603470 2F	RST CHIPR 47 KOHM +-1% 1/10W
R803	061G0603564	RST CHIPR 560 KOHM +-5% 1/10W
R806	061G0603680 2F	RST CHIPR 68 KOHM +-1% 1/10W
R807	061G0603680 2F	RST CHIPR 68 KOHM +-1% 1/10W
R841	061G0603680 2F	RST CHIPR 68 KOHM +-1% 1/10W
R853	061G0603680 2F	RST CHIPR 68 KOHM +-1% 1/10W
R854	061G0603680 2F	RST CHIPR 68 KOHM +-1% 1/10W
R802	061G0603820 2F	RST CHIPR 82 KOHM +-1% 1/10W
R839	061G0805000	0 OHM 1/10W
R850	061G0805000	0 OHM 1/10W
R804	061G0805101	RST CHIPR 100 OHM +-5% 1/8W
R911	061G0805102	RST CHIPR 1KOHM +-5% 1/8W
R917	061G0805102	RST CHIPR 1KOHM +-5% 1/8W
R929	061G0805102	RST CHIPR 1KOHM +-5% 1/8W
R938	061G0805103	10 KOHM 1/10W
R916	061G0805152	RST CHIPR 1.5 KOHM +-5% 1/8W
R825	061G0805220	22&8 1/10W
R829	061G0805220	22&8 1/10W
R912	061G0805220 2F	RST CHIPR 22 KOHM +-1% 1/8W
R915	061G0805224	RST CHIPR 220 KOHM +-5% 1/8W
R837	061G0805473	RST CHIPR 47 KOHM +-5% 1/8W
R810	061G0805510 2F	RST CHIPR 51 KOHM +-1% 1/8W
R931	061G0805822	RST CHIPR 8.2 KOHM +-5% 1/8W
F801	061G1206000	RST CHIPR 0 OHM +-5% 1/4W
F902	061G1206000	RST CHIPR 0 OHM +-5% 1/4W
R967	061G1206000	RST CHIPR 0 OHM +-5% 1/4W
JR901	061G1206000	RST CHIPR 0 OHM +-5% 1/4W
JR809	061G1206000	RST CHIPR 0 OHM +-5% 1/4W
JR808	061G1206000	RST CHIPR 0 OHM +-5% 1/4W
JR807	061G1206000	RST CHIPR 0 OHM +-5% 1/4W
JR805	061G1206000	RST CHIPR 0 OHM +-5% 1/4W
JR804	061G1206000	RST CHIPR 0 OHM +-5% 1/4W
JR803	061G1206000	RST CHIPR 0 OHM +-5% 1/4W
JR802	061G1206000	RST CHIPR 0 OHM +-5% 1/4W
JR801	061G1206000	RST CHIPR 0 OHM +-5% 1/4W
R910	061G1206100	RST CHIP 10R 1/4W 5%
R909	061G1206100	RST CHIP 10R 1/4W 5%
R918	061G1206101	100 1206
R919	061G1206101	100 1206

http://www.wiel.net

R920	061G1206101	100 1206
R935	061G1206101	100 1206
R961	061G1206101	100 1206
R962	061G1206101	100 1206
R921	061G1206102	RST CHIPR 1 KOHM +-5% 1/4W
R922	061G1206102	RST CHIPR 1 KOHM +-5% 1/4W
R923	061G1206102	RST CHIPR 1 KOHM +-5% 1/4W
R928	061G1206102	RST CHIPR 1 KOHM +-5% 1/4W
R855	061G1206330	RST CHIPR 33 OHM +-5% 1/4W
R857	061G1206330	RST CHIPR 33 OHM +-5% 1/4W
R856	061G1206330	RST CHIPR 33 OHM +-5% 1/4W
R858	061G1206330	RST CHIPR 33 OHM +-5% 1/4W
R904	061G1206472	RST CHIPR 4.7 KOHM +-5% 1/4W
R932	061G1206472	RST CHIPR 4.7 KOHM +-5% 1/4W
R933	061G1206472	RST CHIPR 4.7 KOHM +-5% 1/4W
R901	061G1206684	RST CHIPR 680 KOHM +-5% 1/4W
R902	061G1206684	RST CHIPR 680 KOHM +-5% 1/4W
R903	061G1206684	RST CHIPR 680 KOHM +-5% 1/4W
C842	065G0603103 12	CHIP 0.01UF 16V X7R
C924	065G0603103 12	CHIP 0.01UF 16V X7R
C834	065G0603104 22	CHIP 0.1UF 25V X7R
C825	065G0603104 22	CHIP 0.1UF 25V X7R
C821	065G0603104 22	CHIP 0.1UF 25V X7R
C807	065G0603104 22	CHIP 0.1UF 25V X7R
C823	065G0603222 22	CHIP 2200PF 25V X7R
C819	065G0603222 22	CHIP 2200PF 25V X7R
C816	065G0603222 22	CHIP 2200PF 25V X7R
C815	065G0603222 22	CHIP 2200PF 25V X7R
C841	065G0805102 31	1000PF 50V NPO
C838	065G0805102 31	1000PF 50V NPO
C840	065G0805102 31	1000PF 50V NPO
C839	065G0805102 31	1000PF 50V NPO
C910	065G0805102 32	CHIP 1000P 50VX7R 0805
C931	065G0805104 32	CHIP 0.1U 50V X7R
C930	065G0805104 32	CHIP 0.1U 50V X7R
C916	065G0805104 32	CHIP 0.1U 50V X7R
C907	065G0805104 32	CHIP 0.1U 50V X7R
C824	065G0805104 32	CHIP 0.1U 50V X7R
C805	065G0805104 32	CHIP 0.1U 50V X7R
C822	065G0805105 22	CHIP 1UF 25V X7R 0805

http://www.vinc.net

C928	065G0805122 31	CHIP CAP 0805 1200PF J 50V NPO
C820	065G080522131G	220PF 50V NPO 2%
C911	065G0805224 22	CAIP CAP 0.22 UF 25V X7R
C909	065G0805224 32	0.22UF,K,50V,X7R
C845	065G0805225 12	CHIP 2.2UF 16V X7R 0805
C929	065G1206102 72	CHIP 1000PF 500V X7R
C912	065G1206102 72	CHIP 1000PF 500V X7R
D903	093G 64 38 D	DIODE BAW56 DIODES
D808	093G 64 38 D	DIODE BAW56 DIODES
D805	093G 64 38 D	DIODE BAW56 DIODES
D806	093G 6432S	IN4148W
D809	093G 6432S	IN4148W
D814	093G 6432S	IN4148W
D817	093G 6432S	IN4148W
D915	093G 6432S	IN4148W
D916	093G 6432S	IN4148W
D802	093G 6433P	BAV99
D801	093G 6433P	BAV99
D803	093G 6433P	BAV99
D804	093G 6433P	BAV99
ZD922	093G 39S 25 T	RLZ5.1B LLDS
ZD921	093G 39S 61 T	DIODE RLZ16B ROHM
ZD902	093G 39S 61 T	DIODE RLZ16B ROHM
CN901	006G 31500	EYELET
NR901	006G 31502	1.5MM RIVET
T901	006G 31502	1.5MM RIVET
IC904	056G 158 12	KIA431A-AT/P TO-92
C906	065G 2K152 1T6052	1.5NF/2KV Y5P +-10%
C938	065G 2K152 1T6052	1.5NF/2KV Y5P +-10%
C908	067G215Y2207KT	CAP 105℃ 22UF M 50V KINGNICHI
FB901	071G 55 29	FERRITE BEAD
F901	084G 55 1W	FUSE 4A 250V WICKMANN
D901	093G 6038P52T	PS102R
D900	093G1100 1052T	BA159GPT DO-41 CHENMKO
	715G2538 3	POWER BOARD PCB
	Q01G6019 2	SCREW
	Q07G 8 4 1	COMPOUND PALLET
	Q40G 19N68016A	RATING LABEL
	Q40G000268013A	TRY ME LABEL
	Q40G000268035A	NO.1 LABEL

http://www.wjel.net

	Q40G000268037A	SPLENDID LABEL
	Q41G780068031B	WARRANTY CARD APAC NZBD
	Q44G6002CP210A	PAPER CAP
	Q44G9064 1	EPS(L)
	Q44G9064 2	EPS(R)
	Q44G9064680 3B	ASUS 19W CARTON
	Q45G 76 28V13 R	PE BAG
	Q45G 88607 25	PE BAG FOR BASE
	Q45G 88609 94	EPE BAG FOR MONITOR
	Q52G6019 24	TAPE-FIX FOR ASUS
	Q52G6020 66	PROTECT FILM FOR VW198
	045G 76 28 RN	PE BAG FOR MANUAL
E089D	089G 17356G553	AUDIO CABLE 1800MM 32F2818011
	Q41G780068037B	QSG
	Q70G9002680 2A	CD MANUAL
	040G 457834 4A GP	S/N LABEL FOR ID
	040G 457842 2B	PALLET LABEL
	040G 58162435A	LABEL
	040G 582680 3A	PALLET LABEL
	040G 582680 4A	CARTON LABEL
E08907	089G179J30N582	FFC CABLE

http://www.wjel.net

12. Different Parts List

Diversity of T97MMANDPWUSDZ Compared with T97MMANCPWUSDN		
Location	**Part No.**	**Description**
E089C	089G414A18N LS	POWER CORD
	Q40G 19N68017A	RATING LABEL
	Q40G000268032A	CHINA LABEL
	Q40G000268040A	ZBD SPLENDID LABEL
	Q41G780068024A	CHINA WARRANTY CARD
	Q44G9064680 4A	19 LCD ASUS CARTON
	Q45G 88618 81 R	PE BAG FOR CARTON
	041G 68623 1A	CERTIFICATED CARD
	Q45G 76 28 RN R	PE BAG MANUAL

T97MMANBPWU1D

Location	Part No.	Description
	040G 58160811A	GREEN DOT LABEL
	040G 581680 1A	WARRANTY LABEL
	044G6002842 4A	PAPER BOARD
	052G 1150 C	INSULATING TAPE
	052G 1185 49	ASUS TAPE 73-D024084
	052G 1186	SMALL TAPE
	052G 1211 A	CONDUCTIVE TAPE 55MM *45MM *0.08MM
	052G 1211527	CONDUCTIVE TAPE 75MM *45MM *0.08MM
	052G6019 1	INSULATING TAPE
	070GHDCP500HDC	HDCP CODE
E089B	089G1748HAA AC	DVI CABLE
E08907	089G179J30N582	FFC CABLE
E095A	095G8014 8X697	WIRE HARNESS 8P-8P 350MM
	0M1G 130 5120	SCREW
	0M1G 930 5 47 CR3	SCREW
	0M1G1730 6120	SCREW,42-D020523
	0M1G1730 6120	SCREW,42-D020523
	0M1G1730 6120	SCREW,42-D020523
	705GQ715015	MAIN FRAME ASS'Y(19")
	0M1G1840 8120	SCREW
	A15G0216 5	MAIN FRAME
	705GQ734091	STAND ASS'Y(19")
	0Q1G1740 10120	SCREW

http://www.vvel.net

	A34G0330ADJ 1B	STAND
M037	A37G0035 3	HINGE
E750L	750GLM90Z1112N	PANEL M190Z1-L01 C1 NB CMO
	A33G0190ADJ 1L	CABLE CLAMP
	A34G0331ADJ 1B	STAND_COVER
	AM1G1740 10125	SCREW
	AUPC7QU6	AUDIO BOARD G2767-1-X-X-1-070913
	040G 457624 1B	LABEL-CPU
CN603	033G3802 4	WAFER EH-4
CN602	033G3802 6	WAFER
U601	056G 616 1	IC E-TDA7496L ST
C602	067G215V471 4N GP	KY25VB470M-CC3 10*16
C601	067G215V471 4N GP	KY25VB470M-CC3 10*16
C607	067G215Y4713RV	LOW E.S.R 470UF +-20% 16V
C605	067G215Y4713RV	LOW E.S.R 470UF +-20% 16V
C608	067T405V471 3P	EC 105℃ CAP 470UF M 16V
CN601	088G 30210K E	PHONE JACK 5PIN
Q602	057G 414 2	MPS3906
R617	061G 17236252T	3600OHM 5% 1/4W
R607	061G 60210252T	CFR 1K OHM +-5% 1/6W
R608	061G 60210252T	CFR 1K OHM +-5% 1/6W
R619	061G 60210352T	CFR 10KOHM +-5% 1/6W
R620	061G 60210352T	CFR 10KOHM +-5% 1/6W
R621	061G 60210352T	CFR 10KOHM +-5% 1/6W
R622	061G 60210352T	CFR 10KOHM +-5% 1/6W
R601	061G 60218352T	18KOHM 5% 1/6
R603	061G 60218352T	18KOHM 5% 1/6
R610	061G 60220352T	CFR 20K OHM+-5% 1/6W
R611	061G 60220352T	CFR 20K OHM+-5% 1/6W
R602	061G 60220452T	200KOHM 5% 1/6W
R612	061G 60222452T	220KOHM 5% 1/6W
C604	064G178J474 0T6951	CL21X. 0.47UF 50V +-5%
C606	064G178J474 0T6951	CL21X. 0.47UF 50V +-5%
C612	065G 444101 5T	100 PF 10% 50V Y5P
C611	065G 444101 5T	100 PF 10% 50V Y5P
C603	065G 450104 7T	0.1UF +80-20% 50V Y5V
C614	067G215Y1097NT	EC 1.0UF 50V KY50VB1M-TP5 5*11MM
C609	067G215Y1097NT	EC 1.0UF 50V KY50VB1M-TP5 5*11MM
C610	067G215Y1097NT	EC 1.0UF 50V KY50VB1M-TP5 5*11MM
C613	067G215Y1097NT	EC 1.0UF 50V KY50VB1M-TP5 5*11MM

http://www.vic.net

ZD603	093G 39 7752T	HZ5C1-E
D601	093G 64 1152T	1N4148
D602	093G 64 1152T	1N4148
	715G2767 1	AUDIO-BOARD PCB
	Q90G6258 2	HEAT SINK
	KEPC7QAA6	KEY BOARDG2546-C-X-X-1-080128
CN101	033G8032 8D	WAFER 1.25MM
R102	061G0603000	RST CHIPR 0 OHM +-5% 1/10W
R108	061G0603000	RST CHIPR 0 OHM +-5% 1/10W
R105	061G0603000	RST CHIPR 0 OHM +-5% 1/10W
R103	061G0603102	RST CHIPR 1K OHM +-5% 1/10W
R106	061G0603102	RST CHIPR 1K OHM +-5% 1/10W
C102	065G0603104 37	CHIP 0.1UF 50V/Y5V
C103	065G0603104 37	CHIP 0.1UF 50V/Y5V
C104	065G0603104 37	CHIP 0.1UF 50V/Y5V
C105	065G0603104 37	CHIP 0.1UF 50V/Y5V
C101	065G0603104 37	CHIP 0.1UF 50V/Y5V
SW102	077G 604 2 TO	TACT 5W BY TOUKE TS-9-TMG-553
SW103	077G 604 2 TO	TACT 5W BY TOUKE TS-9-TMG-553
SW104	077G 604 2 TO	TACT 5W BY TOUKE TS-9-TMG-553
SW105	077G 604 2 TO	TACT 5W BY TOUKE TS-9-TMG-553
SW101	077G 604 2 TO	TACT 5W BY TOUKE TS-9-TMG-553
ZD101	093G 39P599 T	MM3Z5V6B
ZD102	093G 39P599 T	MM3Z5V6B
	715G2546 2	KEY BOARD PCB
LED101	081G 14 12 GP	LED
	N41G780P680 3A	US WARRANTY CARD NON ZBD
	N44G9003210	CORNER PAPER
	PWPC942MU2	POWER BOARD G2538-4-X-X-12-080418
	Q01G6019 2	SCREW
	Q40G 19N68016A	RATING LABEL
	Q40G000268013A	TRY ME LABEL
	Q40G000268035A	NO.1 LABEL
	Q40G000268037A HP	SPLENDID LABEL
	Q44G6002CP210A	PAPER CAP
	Q44G9064 1	EPS(L)
	Q44G9064 2	EPS(R)
	Q44G9064680 3B	ASUS 19W CARTON
	Q45G 88607 25	PE BAG FOR BASE
	Q45G 88609 94	EPE BAG FOR MONITOR

http://www.vinel.net

	Q52G6020 66	PROTECT FILM FOR VW198
	N41G7800680 8A	J-ROHS CARD
	Q41G780068037C	QSG
	Q45G 76 28 RN R	PE BAG MANUAL
	Q70G9002680 2A	CD MANUAL
	040G 457834 4A GP	S/N LABEL FOR ID
	040G 582680 3A	PALLET LABEL
	040G 582680 4A	CARTON LABEL
	705GN7CB002	CONVERSION ASS'Y
	002G6008 2	SCREW 42-D015647
	CBPC7MMAU2Q1	CONVERSION BOARD G2698-3-X-X-10-070816
	040G 45762412B	CBPC LABEL
CN201	033G3802 6	WAFER
CN401	033G3802 9	WAFER 9P RIGHT ANELE PITCH
CN301	033G801930F CH JS	CONNECTOR
R402	061G152M519 64	5.1OHM 2W
C303	067G 3151014KV	EC 105℃ CAP 100UF M 25V
C402	067G 3151014KV	EC 105℃ CAP 100UF M 25V
C403	067G 3151014KV	EC 105℃ CAP 100UF M 25V
C407	067G 3151014KV	EC 105℃ CAP 100UF M 25V
C408	067G 3151014KV	EC 105℃ CAP 100UF M 25V
C202	067G215V100 7R	LOW E.S.R 10UF M 50V
C209	067G215V100 7R	LOW E.S.R 10UF M 50V
C220	067G215V100 7R	LOW E.S.R 10UF M 50V
CN101	088G 35315F HJ	SOC SUBD H 15P F
CN103	088G 35424F N	DVI 24PIN CONN F
X201	093G 2253B J	14.31818MHZ/85C
	Q85G 583605	GASKET_ALUMINIUM FOIL
U202	056G 562172	IC TSUMU58BWHL-LF PQFP-100
U702	056G 563 31	IC AZ1117D-1.8-E1
U701	056G 563114	IC G1117-33T63UF 1A/3.3V SOT-223
U101	056G1133 84	AF24BC02-S1
U102	056G1133 84	AF24BC02-S1
U204	056G1133 89	IC AF24BC16-SI 16K SOIC-8
U402	056G1133713(WUSMCP9MOQ1)	IC PM25LV010A-100SCE SOIC-8
Q201	057G 417 12 T	KEC 2N3904S-RTK/PS
Q403	057G 417 12 T	KEC 2N3904S-RTK/PS
Q202	057G 417 13 T	KEC 2N3906S-RTK/PS
Q203	057G 417 13 T	KEC 2N3906S-RTK/PS
Q301	057G 417 13 T	KEC 2N3906S-RTK/PS

http://www.vinafix.net

Q302	057G 763 1	A03401 SOT23 BY AOS(A1)
R138	061G0402000	RST CHIPR 0 OHM +-5% 1/16W
R139	061G0402000	RST CHIPR 0 OHM +-5% 1/16W
R201	061G0402000	RST CHIPR 0 OHM +-5% 1/16W
R206	061G0402000	RST CHIPR 0 OHM +-5% 1/16W
R136	061G0402100	RST CHIPR 10 OHM +-5% 1/16W
R133	061G0402100	RST CHIPR 10 OHM +-5% 1/16W
R131	061G0402100	RST CHIPR 10 OHM +-5% 1/16W
R130	061G0402100	RST CHIPR 10 OHM +-5% 1/16W
R129	061G0402100	RST CHIPR 10 OHM +-5% 1/16W
R128	061G0402100	RST CHIPR 10 OHM +-5% 1/16W
R127	061G0402100	RST CHIPR 10 OHM +-5% 1/16W
R126	061G0402100	RST CHIPR 10 OHM +-5% 1/16W
R108	061G0402101	RST CHIPR 100 OHM +-5% 1/16W
R110	061G0402101	RST CHIPR 100 OHM +-5% 1/16W
R113	061G0402101	RST CHIPR 100 OHM +-5% 1/16W
R114	061G0402101	RST CHIPR 100 OHM +-5% 1/16W
R117	061G0402101	RST CHIPR 100 OHM +-5% 1/16W
R119	061G0402101	RST CHIPR 100 OHM +-5% 1/16W
R122	061G0402101	RST CHIPR 100 OHM +-5% 1/16W
R207	061G0402101	RST CHIPR 100 OHM +-5% 1/16W
R213	061G0402101	RST CHIPR 100 OHM +-5% 1/16W
R214	061G0402101	RST CHIPR 100 OHM +-5% 1/16W
R215	061G0402101	RST CHIPR 100 OHM +-5% 1/16W
R221	061G0402101	RST CHIPR 100 OHM +-5% 1/16W
R222	061G0402101	RST CHIPR 100 OHM +-5% 1/16W
R224	061G0402101	RST CHIPR 100 OHM +-5% 1/16W
R225	061G0402101	RST CHIPR 100 OHM +-5% 1/16W
R220	061G0402101	RST CHIPR 100 OHM +-5% 1/16W
R406	061G0402101	RST CHIPR 100 OHM +-5% 1/16W
R140	061G0402102	RST CHIPR 1 KOHM +-5% 1/16W
R103	061G0402102	RST CHIPR 1 KOHM +-5% 1/16W
R102	061G0402102	RST CHIPR 1 KOHM +-5% 1/16W
R123	061G0402103	RST CHIPR 10 KOHM +-5% 1/16W
R132	061G0402103	RST CHIPR 10 KOHM +-5% 1/16W
R137	061G0402103	RST CHIPR 10 KOHM +-5% 1/16W
R203	061G0402103	RST CHIPR 10 KOHM +-5% 1/16W
R205	061G0402103	RST CHIPR 10 KOHM +-5% 1/16W
R209	061G0402103	RST CHIPR 10 KOHM +-5% 1/16W
R210	061G0402103	RST CHIPR 10 KOHM +-5% 1/16W

http://www.vinafix.net

R211	061G0402103	RST CHIPR 10 KOHM +-5% 1/16W
R223	061G0402103	RST CHIPR 10 KOHM +-5% 1/16W
R226	061G0402103	RST CHIPR 10 KOHM +-5% 1/16W
R227	061G0402103	RST CHIPR 10 KOHM +-5% 1/16W
R230	061G0402103	RST CHIPR 10 KOHM +-5% 1/16W
R231	061G0402103	RST CHIPR 10 KOHM +-5% 1/16W
R232	061G0402103	RST CHIPR 10 KOHM +-5% 1/16W
R234	061G0402103	RST CHIPR 10 KOHM +-5% 1/16W
R301	061G0402103	RST CHIPR 10 KOHM +-5% 1/16W
R305	061G0402103	RST CHIPR 10 KOHM +-5% 1/16W
R401	061G0402103	RST CHIPR 10 KOHM +-5% 1/16W
R403	061G0402103	RST CHIPR 10 KOHM +-5% 1/16W
R405	061G0402103	RST CHIPR 10 KOHM +-5% 1/16W
R118	061G0402103	RST CHIPR 10 KOHM +-5% 1/16W
R219	061G0402104	RST CHIPR 100 KOHM +-5% 1/16W
R105	061G0402222	RST CHIPR 2.2 KOHM +-5% 1/16W
R106	061G0402222	RST CHIPR 2.2 KOHM +-5% 1/16W
R202	061G0402223	RST CHIPR 22 KOHM +-5% 1/16W
R204	061G0402390 0F	RST CHIP 390R 1/16W 1%
R229	061G0402390 1F	RST CHIPR 3.9KOHM +-1% 1/16W
R228	061G0402390 1F	RST CHIPR 3.9KOHM +-1% 1/16W
R109	061G0402471	RST CHIPR 470 OHM +-5% 1/16W
R404	061G0402472	RST CHIPR 4.7 KOHM +-5% 1/16W
R218	061G0402472	RST CHIPR 4.7 KOHM +-5% 1/16W
R217	061G0402472	RST CHIPR 4.7 KOHM +-5% 1/16W
R135	061G0402472	RST CHIPR 4.7 KOHM +-5% 1/16W
R134	061G0402472	RST CHIPR 4.7 KOHM +-5% 1/16W
R121	061G0402472	RST CHIPR 4.7 KOHM +-5% 1/16W
R120	061G0402472	RST CHIPR 4.7 KOHM +-5% 1/16W
R304	061G0402473	RST CHIPR 47 KOHM +-5% 1/16W
R104	061G0402560	RST CHIP 56R 1/16W 5%
R111	061G0402560	RST CHIP 56R 1/16W 5%
R115	061G0402560	RST CHIP 56R 1/16W 5%
R216	061G0402560	RST CHIP 56R 1/16W 5%
R233	061G0402682	RST CHIP 6K8 1/16W 5%
R208	061G0402682	RST CHIP 6K8 1/16W 5%
R107	061G0402750	RST CHIPR 75 OHM +-5% 1/16W
R112	061G0402750	RST CHIPR 75 OHM +-5% 1/16W
R116	061G0402750	RST CHIPR 75 OHM +-5% 1/16W
R212	061G0402750	RST CHIPR 75 OHM +-5% 1/16W

http://www.vinafix.vn

R101	061G0603000	RST CHIPR 0 OHM +-5% 1/10W
FB101	061G0603000	RST CHIPR 0 OHM +-5% 1/10W
FB102	061G0603000	RST CHIPR 0 OHM +-5% 1/10W
FB103	061G0603000	RST CHIPR 0 OHM +-5% 1/10W
R302	061G0805331	RST CHIPR 330 OHM +-5% 1/8W
C106	065G0402102 32	1000PF +-10% 50V X7R
C212	065G0402104 15	MLCC 0402 0.1UF K 16V X5R
C211	065G0402104 15	MLCC 0402 0.1UF K 16V X5R
C210	065G0402104 15	MLCC 0402 0.1UF K 16V X5R
C208	065G0402104 15	MLCC 0402 0.1UF K 16V X5R
C207	065G0402104 15	MLCC 0402 0.1UF K 16V X5R
C206	065G0402104 15	MLCC 0402 0.1UF K 16V X5R
C205	065G0402104 15	MLCC 0402 0.1UF K 16V X5R
C204	065G0402104 15	MLCC 0402 0.1UF K 16V X5R
C203	065G0402104 15	MLCC 0402 0.1UF K 16V X5R
C201	065G0402104 15	MLCC 0402 0.1UF K 16V X5R
C409	065G0402104 15	MLCC 0402 0.1UF K 16V X5R
C405	065G0402104 15	MLCC 0402 0.1UF K 16V X5R
C401	065G0402104 15	MLCC 0402 0.1UF K 16V X5R
C302	065G0402104 15	MLCC 0402 0.1UF K 16V X5R
C301	065G0402104 15	MLCC 0402 0.1UF K 16V X5R
C231	065G0402104 15	MLCC 0402 0.1UF K 16V X5R
C229	065G0402104 15	MLCC 0402 0.1UF K 16V X5R
C228	065G0402104 15	MLCC 0402 0.1UF K 16V X5R
C227	065G0402104 15	MLCC 0402 0.1UF K 16V X5R
C226	065G0402104 15	MLCC 0402 0.1UF K 16V X5R
C225	065G0402104 15	MLCC 0402 0.1UF K 16V X5R
C223	065G0402104 15	MLCC 0402 0.1UF K 16V X5R
C219	065G0402104 15	MLCC 0402 0.1UF K 16V X5R
C217	065G0402104 15	MLCC 0402 0.1UF K 16V X5R
C216	065G0402104 15	MLCC 0402 0.1UF K 16V X5R
C215	065G0402104 15	MLCC 0402 0.1UF K 16V X5R
C214	065G0402104 15	MLCC 0402 0.1UF K 16V X5R
C213	065G0402104 15	MLCC 0402 0.1UF K 16V X5R
C410	065G0402104 15	MLCC 0402 0.1UF K 16V X5R
C411	065G0402104 15	MLCC 0402 0.1UF K 16V X5R
C125	065G0402104 15	MLCC 0402 0.1UF K 16V X5R
C112	065G0402104 15	MLCC 0402 0.1UF K 16V X5R
C115	065G0402104 15	MLCC 0402 0.1UF K 16V X5R
C117	065G0402104 15	MLCC 0402 0.1UF K 16V X5R

http://www.vinafix.net

C118	065G0402104 15	MLCC 0402 0.1UF K 16V X5R
C119	065G0402104 15	MLCC 0402 0.1UF K 16V X5R
C120	065G0402104 15	MLCC 0402 0.1UF K 16V X5R
C121	065G0402104 15	MLCC 0402 0.1UF K 16V X5R
C122	065G0402104 15	MLCC 0402 0.1UF K 16V X5R
C123	065G0402104 15	MLCC 0402 0.1UF K 16V X5R
C124	065G0402104 15	MLCC 0402 0.1UF K 16V X5R
C103	065G0402220 31	CHIP 22PF 50V NPO
C102	065G0402220 31	CHIP 22PF 50V NPO
C218	065G0402224 17	CAP CER 0.22UF -20%-80%
C224	065G0402224 17	CAP CER 0.22UF -20%-80%
C114	065G0402224 17	CAP CER 0.22UF -20%-80%
C116	065G0402224 17	CAP CER 0.22UF -20%-80%
C222	065G0402270 31	0402 27PF J 50V NPO
C221	065G0402270 31	0402 27PF J 50V NPO
C101	065G0402473 12	CHIP 0.047UF 16V X7R
C105	065G0402473 12	CHIP 0.047UF 16V X7R
C107	065G0402473 12	CHIP 0.047UF 16V X7R
C109	065G0402473 12	CHIP 0.047UF 16V X7R
C110	065G0402473 12	CHIP 0.047UF 16V X7R
C113	065G0402473 12	CHIP 0.047UF 16V X7R
FB301	071G 56K121 M	CHIP BEAD
FB201	071G 56V301 B	CHIP BEAD FCM2012VF-301T07 BULLWILL
FB203	071G 56V301 B	CHIP BEAD FCM2012VF-301T07 BULLWILL
FB204	071G 56V301 B	CHIP BEAD FCM2012VF-301T07 BULLWILL
FB205	071G 56V301 B	CHIP BEAD FCM2012VF-301T07 BULLWILL
FB206	071G 56V301 B	CHIP BEAD FCM2012VF-301T07 BULLWILL
D102	093G 64 33	DIO SIG SM BAV99 (PHSE)R
D103	093G 64 33	DIO SIG SM BAV99 (PHSE)R
D104	093G 64 33	DIO SIG SM BAV99 (PHSE)R
D110	093G 64 33	DIO SIG SM BAV99 (PHSE)R
D111	093G 64 33	DIO SIG SM BAV99 (PHSE)R
D112	093G 64 33	DIO SIG SM BAV99 (PHSE)R
D113	093G 64 33	DIO SIG SM BAV99 (PHSE)R
D114	093G 64 33	DIO SIG SM BAV99 (PHSE)R
D115	093G 64 33	DIO SIG SM BAV99 (PHSE)R
D116	093G 64 33	DIO SIG SM BAV99 (PHSE)R
D117	093G 64 33	DIO SIG SM BAV99 (PHSE)R
D101	093G 64 42 P	BAV70 SOT23 BY PAN JIT
D105	093G 64 42 P	BAV70 SOT23 BY PAN JIT

http://www.vier.net

D106	093G 39GA01 T	RLZ5.6B
D107	093G 39GA01 T	RLZ5.6B
D108	093G 39GA01 T	RLZ5.6B
D109	093G 39GA01 T	RLZ5.6B
D118	093G 39GA01 T	RLZ5.6B
ZD101	093G 39GA01 T	RLZ5.6B
ZD102	093G 39GA01 T	RLZ5.6B
ZD103	093G 39GA01 T	RLZ5.6B
ZD104	093G 39GA01 T	RLZ5.6B
ZD105	093G 39GA01 T	RLZ5.6B
ZD106	093G 39GA01 T	RLZ5.6B
	715G2698 3	MAIN BOARD PCB
	078G 322 9 Y	SPK 8OHM 1.5W 145 200MM 43X18MM SUNLIN
	040G 58162435A	P/N LABEL FOR MANUAL PE BAG
	705GN734121 YJ	BEZEL ASS'Y
	705GN734167 YJ	REAR ASSY
	705GN734124 YJ	BASE ASS'Y
	N52G 2191 A	TAPE
	N52G 1ASU012 HY	TAPE-73-D001327(82296 X48 X0.045 MM)
	Q45G 76 28V13 R	PE BAG
	089G404A18N IS	POWER CORD/32E1818018
	089G 173 56N03	AUDIO CABLE 1.8M
	089G 728HAA DB	D-SUB

http://www.wiel.net